brother

FACSIMILE EQUIPMENT

SERVICE MANUAL

MODEL: FAX750/FAX770/FAX870MC
FAX-910/FAX-920/FAX-921/FAX-930/FAX-931
MFC-925/MFC970MC

© Copyright Brother 1998

All rights reserved.

No part of this publication may be reproduced in any form or by any means without permission in writing from the publisher.

Specifications are subject to change without notice.

PREFACE

This publication is a Service Manual covering the specifications, construction, theory of operation, and maintenance of the Brother facsimile equipment. It includes information required for field troubleshooting and repair--disassembly, reassembly, and lubrication--so that service personnel will be able to understand equipment function, to rapidly repair the equipment and order any necessary spare parts.

To perform appropriate maintenance so that the facsimile equipment is always in best condition for the customer, the service personnel must adequately understand and apply this manual.

This manual is made up of six chapters and appendices.

CHAPTER I. GENERAL DESCRIPTION

CHAPTER II. INSTALLATION

CHAPTER III. THEORY OF OPERATION

CHAPTER IV. DISASSEMBLY/REASSEMBLY AND LUBRICATION

CHAPTER V. MAINTENANCE MODE

CHAPTER VI. ERROR INDICATION AND TROUBLESHOOTING

Appendix 1. EEPROM Customizing Codes

Appendix 2. Circuit Diagrams

This manual describes the models and their versions to be destined for major countries. The specifications and functions are subject to change depending upon each destination.

CHAPTER I.

GENERAL DESCRIPTION

CONTENTS

1. EQUIPMENT OUTLINE I-1

1.1 External Appearance and Weight I-1

1.2 Components I-1

2. SPECIFICATIONS I-2

1. EQUIPMENT OUTLINE

1.1 External Appearance and Weight

The figure below shows the equipment appearance and approximate dimensions.

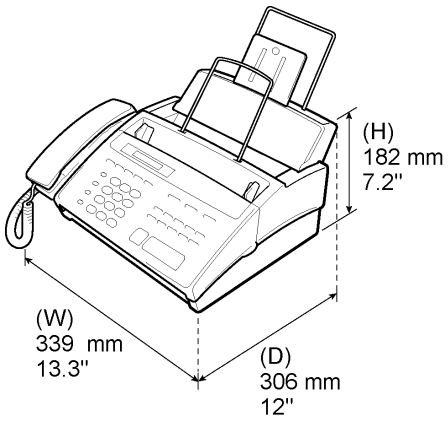

Weight:	Machine proper (excluding a ribbon cartridge)	Approx. 4 kg (8.82 lbs.)
	In package	Approx. 6 kg (13.23 lbs.)

1.2 Components

The equipment consists of the following major components:

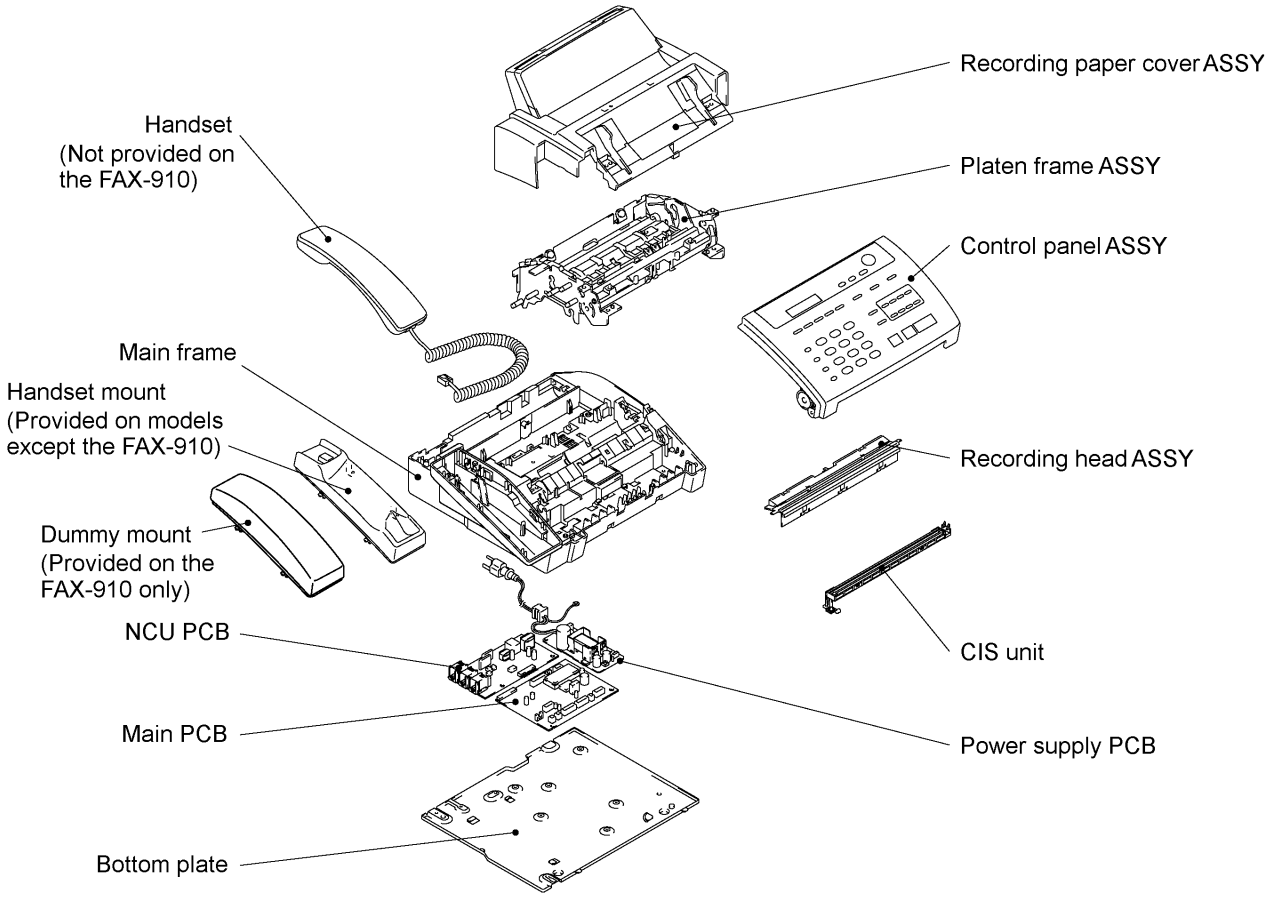

2. SPECIFICATIONS

Model Name	FAX750	FAX770
Engine	Thermal transfer	Thermal transfer
Color	Black (1395)	White (1397)
Transmission Speed (sec)	15	15
Modem Speed (bps)	9600	9600
Group Compatibility	G3	G3
Input/Output Width	8.5"/8.5"	8.5"/8.5"
ADF (pages)	10	10
Recording Paper Loadable	100 sheets	100 sheets
Ribbon Life (Letter-size print)	250 pages (77 m)	250 pages (77 m)
Starter Ribbon Life (Letter-size print)	100 pages (30 m)	100 pages (30 m)
LCD Size	16 x 1	16 x 1
On-Screen Programming	Yes	Yes
Super Fine	Yes	Yes
Smoothing	Yes	Yes
Gray Scale (levels)	64 by Dithered	64 by Dithered
One Touch	8	8
Speed Dial	40	40
Telephone Index	Yes	Yes
Speaker Phone	Monitor	Monitor
Handset	Yes	Yes
FAX/TEL Switch	Yes	Yes
Distinctive Ring Detection*	Yes	Yes
Caller ID*	Yes	Yes
Call Waiting Caller ID*	Yes	Yes
TAD Interface	Yes	Yes
Enhanced Remote Activation	Yes	Yes
Automatic Redial	Yes	Yes
Next-FAX Reservation	Yes	Yes
Multi-Resolution Transmission	Yes	Yes
Polling Type	Std/Seq	Std/Seq
Delayed Transmission	1-timer	1-timer
Call Reservation	Yes	Yes
Electronic Coverpage	Yes - Super	Yes - Super
Call Back Message	Yes	Yes
Activity Report	Yes	Yes
TX Verification Report	Yes	Yes
Memory Capacity (pages)	512 KB (20 pages)	512 KB (20 pages)
ECM	Yes	Yes
Broadcasting	Yes	Yes
Quick-Scan	Yes	Yes
Out-of-Paper Reception	Yes	Yes
Multi-Copying w/ Sorting	Yes	Yes
Enlargement/Reduction Ratio	Yes (50-150%)	Yes (50-150%)
Multi-Transmission	No	No
Confidential Mailbox	No	No
Auto Reduction	Yes	Yes
Message Center	No	No
TAD Recording Time	No	No
Fax Forwarding/Paging	No	Yes
Fax Retrieval	No	Yes
Fax-/Voice-on-demand	No	No
Fax & Voice Mailbox	No	No
Help List	Yes	Yes
Missing Link/Multifunction Link	Ready	Ready
Optional Memory	No	No
Voice Alarm	No	No
Others		

* Check your local telephone company for availability of this service.

Model Name	FAX870MC	MFC970MC
Engine	Thermal transfer	Thermal transfer
Color	White (1397)	White (1138)
Transmission Speed (sec)	9	9
Modem Speed (bps)	14,400	14,400
Group Compatibility	G3	G3
Input/Output Width	8.5"/8.5"	8.5"/8.5"
ADF (pages)	10	10
Recording Paper Loadable	100 sheets	100 sheets
Ribbon Life (Letter-size print)	250 pages (77 m)	250 pages (77 m)
Starter Ribbon Life (Letter-size print)	100 pages (30 m)	100 pages (30 m)
LCD Size	16 x 1	16 x 1
On-Screen Programming	Yes	Yes
Super Fine	Yes	Yes
Smoothing	Yes	Yes
Gray Scale (levels)	64 by Dithered	64 by Dithered
One Touch	8	8
Speed Dial	40	40
Telephone Index	Yes	Yes
Speaker Phone	Full duplex (digital)	Full duplex (digital)
Handset	Yes	Yes
FAX/TEL Switch	Yes	Yes
Distinctive Ring Detection*	Yes	Yes
Caller ID*	Yes	Yes
Call Waiting Caller ID*	Yes	Yes
TAD Interface	Yes	Yes
Enhanced Remote Activation	Yes	Yes
Automatic Redial	Yes	Yes
Next-FAX Reservation	Yes	Yes
Multi-Resolution Transmission	Yes	Yes
Polling Type	Std/Seq	Std/Seq
Delayed Transmission	1-timer	1-timer
Call Reservation	Yes	Yes
Electronic Coverpage	Yes - Super	Yes - Super
Call Back Message	Yes	Yes
Activity Report	Yes	Yes
TX Verification Report	Yes	Yes
Memory Capacity (pages)	512 KB (20 pages)	512 KB (20 pages)
ECM	Yes	Yes
Broadcasting	Yes	Yes
Quick-Scan	Yes	Yes
Out-of-Paper Reception	Yes	Yes
Multi-Copying w/ Sorting	Yes	Yes
Enlargement/Reduction Ratio	Yes (50-150%)	Yes (50-150%)
Multi-Transmission	No	No
Confidential Mailbox	No	No
Auto Reduction	Yes	Yes
Message Center	Yes	Yes
TAD Recording Time	15 minutes	15 minutes
Fax Forwarding/Paging	Yes	Yes
Fax Retrieval	Yes	Yes
Fax-/Voice-on-demand	Voice-on-demand	Voice-on-demand
Fax & Voice Mailbox	Yes	Yes
Help List	Yes	Yes
Missing Link/Multifunction Link	Ready	Included
Optional Memory	No	No
Voice Alarm	No	No
Others		

* Check your local telephone company for availability of this service.

Model Name	FAX-910	FAX-920/921
Engine	Thermal Transfer	Thermal Transfer
Color	Black(1395)	Black(1395)/White(1397/1138)
Transmission Speed (sec)	15	15
Modem Speed (bps)	9600	9600
Group Compatibility	G3	G3
Input/Output Width	8.5"/8.5"	8.5"/8.5"
ADF (pages)	10	10
Recording Paper Loadable	100 sheets	100 sheets
Ribbon Life (A4-size print)	235 pages	235 pages
Starter Ribbon Life (A4-size print)	90 pages (30 m)	90 pages (30 m)
LCD Size	16 X 1	16 X 1
On-Screen Programming	Yes	Yes
Super Fine	Yes	Yes
Smoothing	Yes	Yes
Gray Scale (levels)	64 by Dithered	64 by Dithered
One Touch	16 w/SHIFT KEY	16 w/SHIFT KEY
Speed Dial	32	32
Telephone Index	Yes	Yes
Speaker Phone	Monitor	Monitor
Handset	No	Yes
FAX/TEL Switch	Yes	Yes
Caller ID	Yes HOL/SWE/UK/FRA/NOR	Yes HOL/SWE/UK/FRA/NOR
Call Waiting Caller ID	No	No
Distinctive Ringing	No	No
TAD Interface	Yes	Yes
Enhanced Remote Activation	Yes	Yes
Automatic Redial	Yes	Yes
Next-FAX Reservation	Yes	Yes
Multi-Resolution Transmission	Yes	Yes
Polling Type	Sim/Sec/Del/Seq	Sim/Sec/Del/Seq
Delayed Transmission	3-timer	3-timer
Call Reservation	Yes	Yes
Electronic Coverpage	Yes - Super	Yes - Super
Call Back Message	Yes	Yes
Journal Report	Yes	Yes
TX Verification Report	Yes	Yes
Memory Capacity (pages)	512KB (20 pages)	512KB (20 pages)
ECM	Yes	Yes
Broadcasting	Yes	Yes
Quick-Scan	Yes	Yes
Out-of-Paper Reception	Yes	Yes
Multi-Copying w/Sorting	Yes	Yes
Enlargement/Reduction Ratio	Yes (50-150%)	Yes (50-150%)
Multi-Transmission	Yes	Yes
Confidential Mailbox	No	No
Auto Reduction	Yes	Yes
Message Manager	No	No
TAD Recording Time	No	No
Fax Forwarding/Paging	Yes - Only Fax forwarding	Yes - Only Fax forwarding
Fax Retrieval	Yes	Yes
Fax-/Voice-on-demand	No	No
Fax & Voice Mailbox	No	No
Help List	Yes	Yes
MFL PRO for Fax	Ready	Ready
Optional Memory	No	No
Memo Manager	No	No
Mute Key	No	Yes-music on hold; Green Sleeves
Backup for Clock	9 hours	9 hours
Output Tray	Option (CT70)	Option (CT70)
Backup for Page Memory	6 hours	6 hours

Model Name	FAX-930/931	MFC-925
Engine	Thermal Transfer	Thermal Transfer
Color	Black(1395)/White(1397/1138)	White(1138)
Transmission Speed (sec)	9	15
Modem Speed (bps)	14,400	9600
Group Compatibility	G3	G3
Input/Output Width	8.5"/8.5"	8.5"/8.5"
ADF (pages)	10	10
Recording Paper Loadable	100 sheets	100 sheets
Ribbon Life (A4-size print)	235 pages	235 pages
Starter Ribbon Life (A4-size print)	90 pages (30 m)	90 pages (30 m)
LCD Size	16X1	16X1
On-Screen Programming	Yes	Yes
Super Fine	Yes	Yes
Smoothing	Yes	Yes
Gray Scale (levels)	64 by Dithered	64 by Dithered
One Touch	16 w/SHIFT KEY	16 w/SHIFT KEY
Speed Dial	32	32
Telephone Index	Yes	Yes
Speaker Phone	Full duplex (digital)	Monitor
Handset	Yes	Yes
FAX/TEL Switch	Yes	Yes
Caller ID	Yes HOL/SWE/UK/FRA/NOR	Yes HOL/SWE/UK/FRA/NOR
Call Waiting Caller ID	No	No
Distinctive Ringing	No	No
TAD Interface	Yes	Yes
Enhanced Remote Activation	Yes	Yes
Automatic Redial	Yes	Yes
Next-FAX Reservation	Yes	Yes
Multi-Resolution Transmission	Yes	Yes
Polling Type	Sim/Sec/Del/Seq	Sim/Sec/Del/Seq
Delayed Transmission	3-timer	3-timer
Call Reservation	Yes	Yes
Electronic Coverpage	Yes - Super	Yes - Super
Call Back Message	Yes	Yes
Journal Report	Yes	Yes
TX Verification Report	Yes	Yes
Memory Capacity (pages)	512KB (20 pages)	512KB (20 pages)
ECM	Yes	Yes
Broadcasting	Yes	Yes
Quick-Scan	Yes	Yes
Out-of-Paper Reception	Yes	Yes
Multi-Copying w/Sorting	Yes	Yes
Enlargement/Reduction Ratio	Yes (50-150%)	Yes (50-150%)
Multi-Transmission	Yes	Yes
Confidential Mailbox	No	No
Auto Reduction	Yes	Yes
Message Manager	Yes	No
TAD Recording Time	15 minutes	No
Fax Forwarding/Paging	Yes - both	Yes - Only Fax forwarding
Fax Retrieval	Yes	Yes
Fax-/Voice-on-demand	Voice-on-demand	No
Fax & Voice Mailbox	Yes	No
Help List	Yes	Yes
MFL PRO for Fax	Ready	Included
Optional Memory	No	No
Memo Manager	No	No
Mute Key	Yes-music on hold; Green Sleeves	Yes-music on hold; Green Sleeves
Backup for Clock	15 hours	9 hours
Output Tray	Option (CT70)	Option (CT70)
Backup for Page Memory	6 hours	6 hours

CHAPTER II.

INSTALLATION

CHAPTER III.

THEORY OF OPERATION

CONTENTS

1. OVERVIEW III-1

2. MECHANISMS III-2

2.1 Transmitting Mechanism (Feeding and scanning documents) III-2

2.1.1 Automatic document feeder (ADF) III-2

2.1.2 Scanner III-3

2.2 Receiving Mechanism (Feeding paper and printing data) III-4

2.3 Power Transmission Mechanism III-5

2.3.1 Structure of the gear train III-5

2.3.2 Description of planetary gear system III-6

2.3.3 Power transmission for four operation modes III-7

2.3.4 Power transmission route III-14

2.4 Sensors and Actuators III-16

3. CONTROL ELECTRONICS III-19

3.1 Configuration III-19

3.2 Main PCB III-20

3.3 NCU PCB III-22

3.4 Control Panel PCB III-24

3.5 Power Supply PCB III-25

1. OVERVIEW

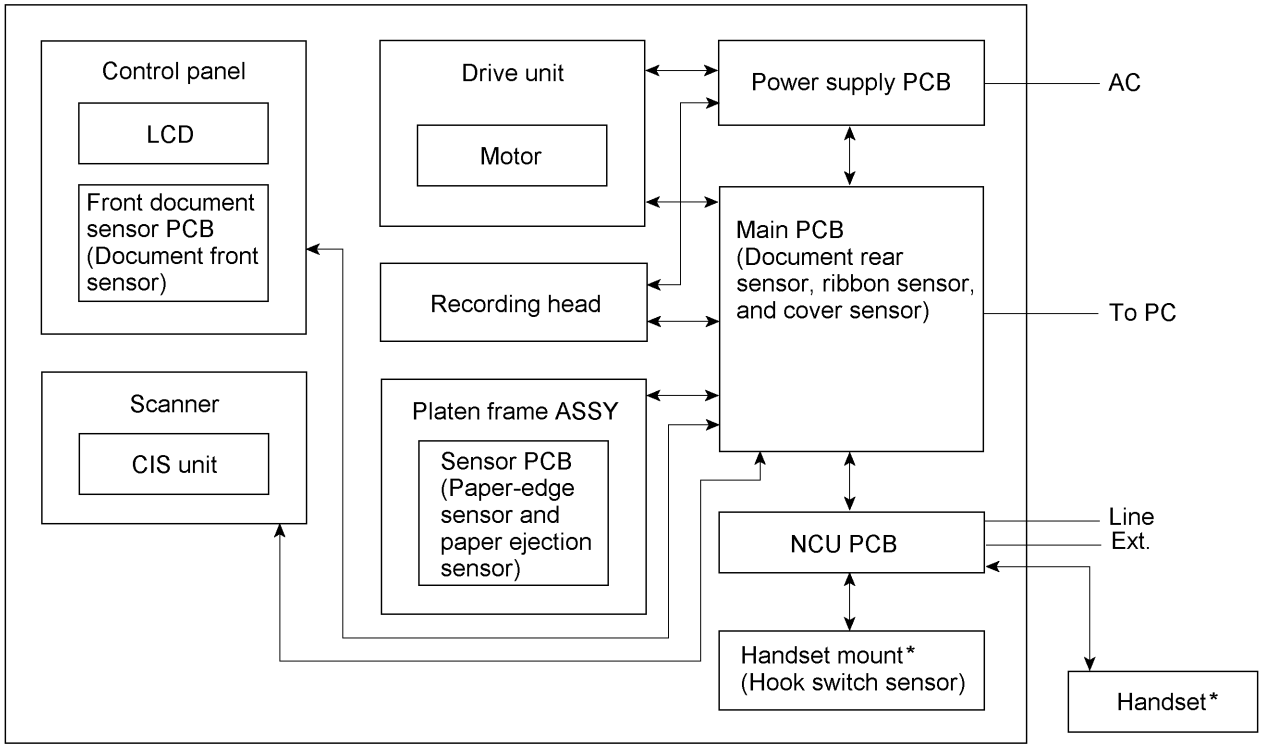

*Not provided on the FAX-910.

2. MECHANISMS

The facsimile equipment is classified into the following mechanisms:

- Transmitting Mechanism — Feeding and scanning documents
- Receiving Mechanism — Feeding paper and printing data
- Power Transmission Mechanism — Switching the power transmission route
- Sensors and Actuators

2.1 Transmitting Mechanism (Feeding and scanning documents)

The transmitting mechanism consists of the document stacker, automatic document feeder (ADF), document feeding related rollers, scanner, and document sensors. (For details about the sensors, refer to Section 2.4.)

For the drive power source, refer to Section 2.3.

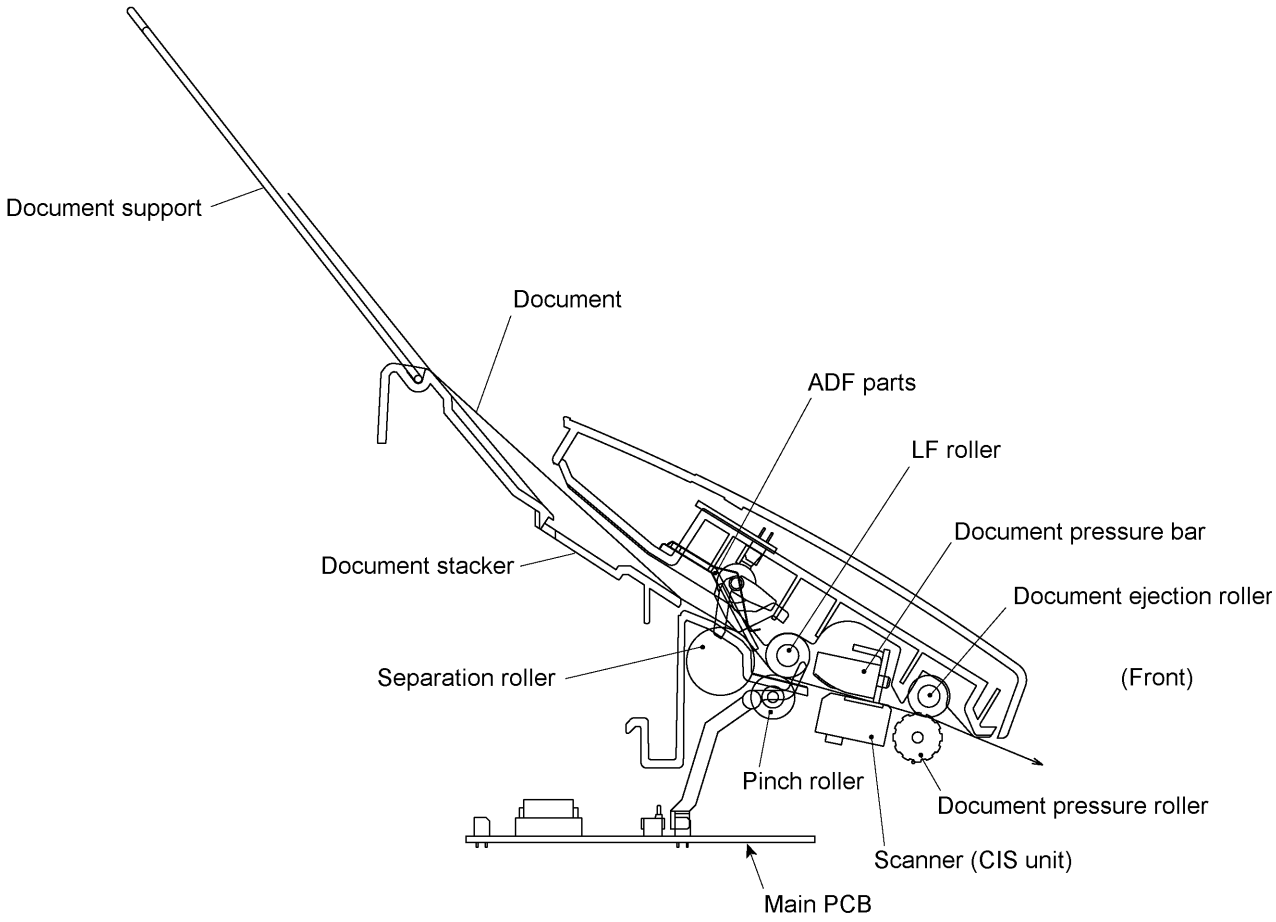

2.1.1 Automatic document feeder (ADF)

If the operator sets documents on the stacker and starts the transmitting operation, the ADF (consisting of the separation roller and ADF parts) feeds those documents into the equipment, starting from the bottom sheet to the top, page by page. Each document advances to the scanner with the LF roller, and then it is fed with the document ejection roller.

2.1.2 Scanner

The scanner uses a contact image sensor (CIS) unit which consists of an LED array illuminating documents, a self-focus lens array collecting the reflected light, a CIS PCB carrying out photoelectric conversion to output picture element data, and a cover glass on which a document advances. When the document passes between the document pressure bar and the cover glass, it is scanned.

2.2 Receiving Mechanism (Feeding paper and printing data)

The receiving mechanism consists of the recording paper cover ASSY, paper feed roller ASSY, platen, thermal recording head, paper ejection roller, and sensors. (For details about the sensors, refer to Section 2.4.)

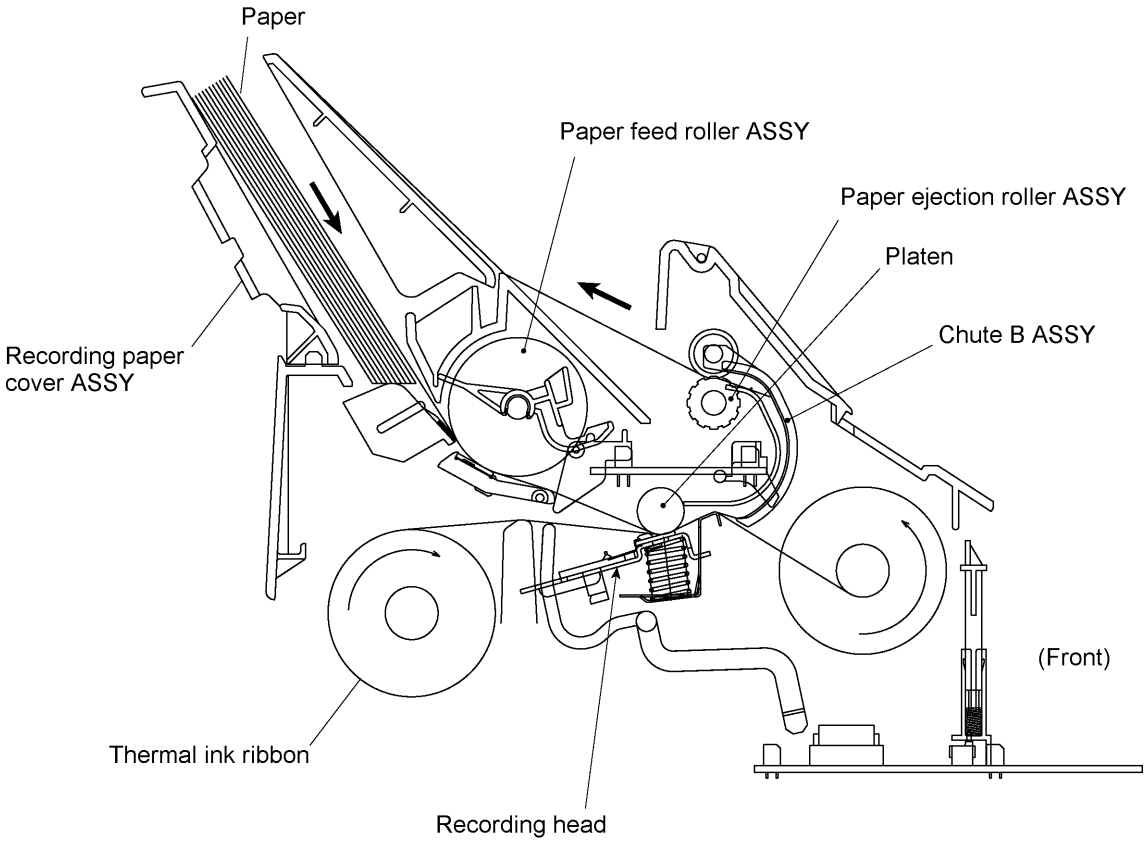

STEP 1: In the paper feeding mode

If the equipment receives data, the control electronics activates the solenoid and rotates the motor counterclockwise to drive the paper feed roller (and paper ejection roller). This pulls in a sheet of paper and feeds it until its leading edge reaches the point just before the printing position.

STEP 2: In the recording (platen drive & ribbon take-up) mode

The control electronics deactivates the solenoid and rotates the motor clockwise to drive the platen gear and the ribbon take-up gear as well as the paper ejection roller. This feeds the paper up to the printing position where the thermal recording head prints, as well as feeding the thermal ink ribbon.

STEP 3: In the paper ejection mode

The same operation as for STEP 1 takes place so as to eject the paper.

2.3 Power Transmission Mechanism

The equipment has a single drive motor whose power transmission route can be switched by the planetary gear systems and the solenoid. This switching allows the equipment to function in four operation modes (scanning, paper feeding/ejecting, recording, and copying modes). For the details about the planetary gear systems, refer to Subsection 2.3.2.

2.3.1 Structure of the gear train

All of the motor and gears are located at the left side of the equipment. As illustrated in the figure below (On the outer side of the drive unit), the rotational torque of the motor on the drive unit is transmitted via the gears on the drive unit to the gears on the main frame, to those on the control panel ASSY, and to those on the platen frame.

If gear 39/62 of the friction torque transmission ASSY ("V" in the figure below) rotates, gear 20 ("z") on the inner side of the drive unit also rotates. The rotational torque is further transmitted to the ribbon drive gear ("w") which drives the ribbon take-up gear ("a") on the ribbon cartridge, as shown in the figure below (On the inner side of the drive unit).

<u>On the outer side of the drive unit and on the left sides of the platen frame, main frame and control panel ASSY</u>

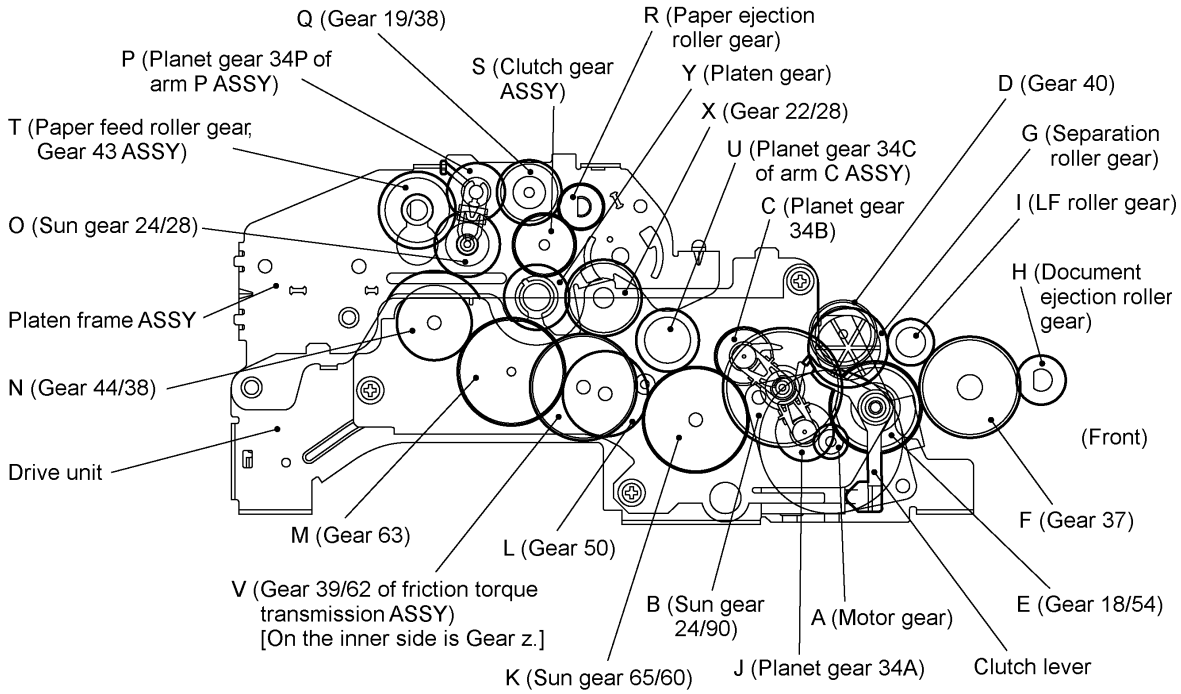

<u>On the inner side of the drive unit</u>

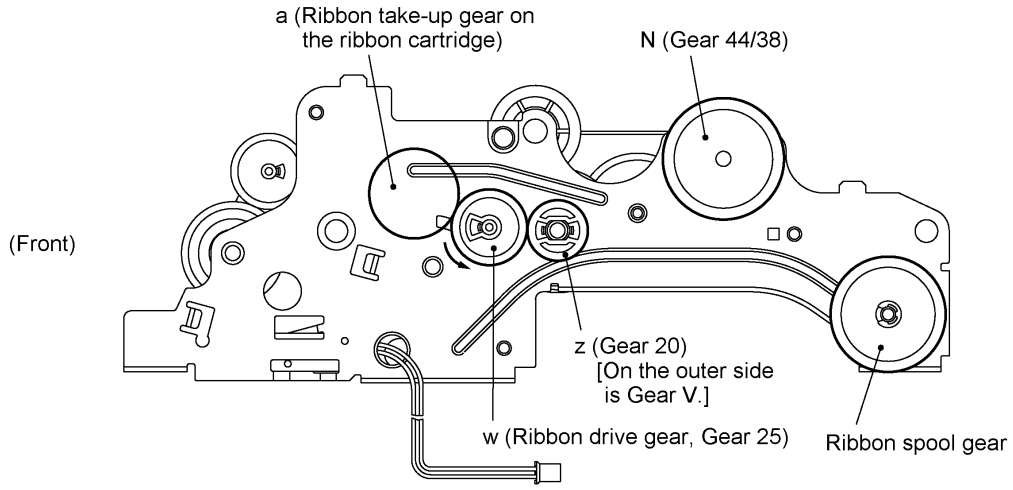

Gear Train

2.3.2 Description of planetary gear system

The equipment uses the following three planetary gear systems:

- Sun gear 24/90 ("B" in the figure given on the previous page) and its planet gears
- Sun gear 65/60 ("K") and its planet gear
- Sun gear 24/28 ("O") and its planet gear

This section describes the planetary gear system of sun gear 24/90 ("B"). It consists of sun gear 24/90, two planet gears 34, arm A, and arm B as shown below.

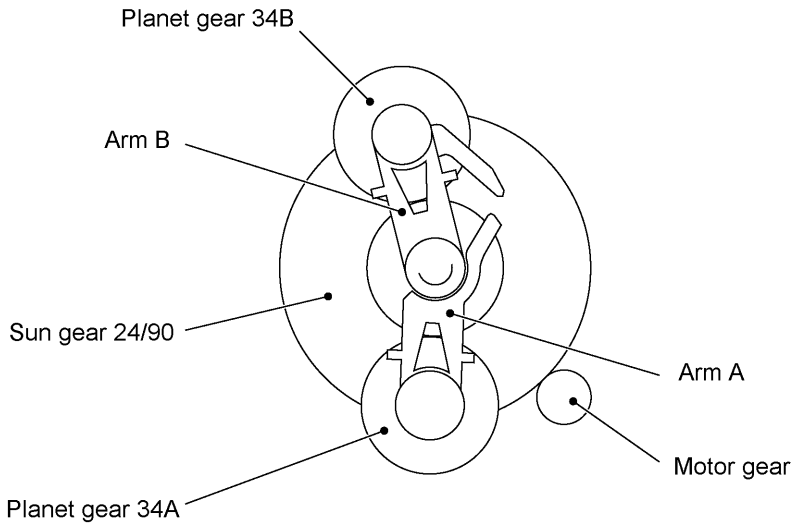

Planetary Gear System

If the motor rotates, sun gear 24/90 rotates so that the rotational torque is transmitted to the engagement between the sun gear and planet gears 34. Since the arms and planet gears are so designed that the moment of the arms is less than that of the planet gears, the arms turn around the center shaft in the same direction as sun gear 24/90.

If the planet gear(s) becomes engaged with any other gear so that the arm cannot turn furthermore, the rotational torque of sun gear 24/90 is transmitted to that planet gear. Accordingly, the planet gear starts rotation in the opposite direction of sun gear 24/90.

2.3.3 Power transmission for four operation modes

Depending upon the solenoid ON/OFF state and the motor rotation direction, the planetary gear train switches the power transmission route for the four operation modes.

Solenoid ON/OFF state

Solenoid: OFF

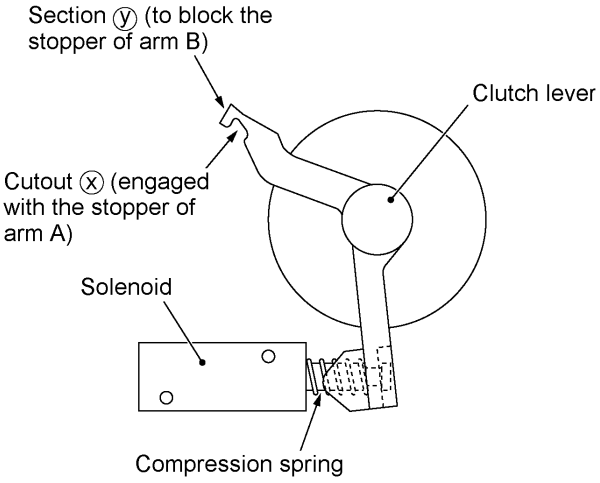

Solenoid: ON

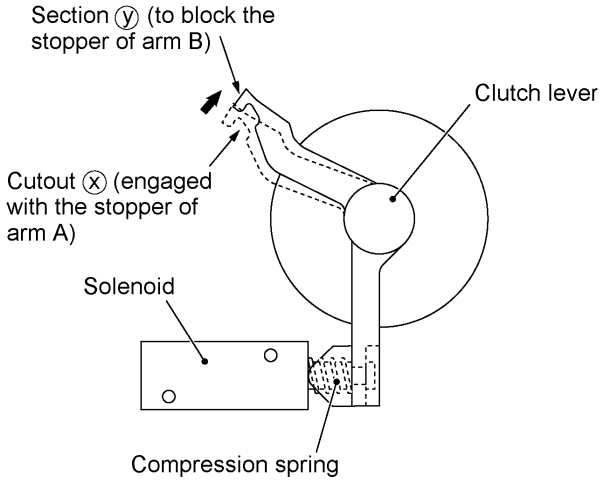

Motor rotation direction

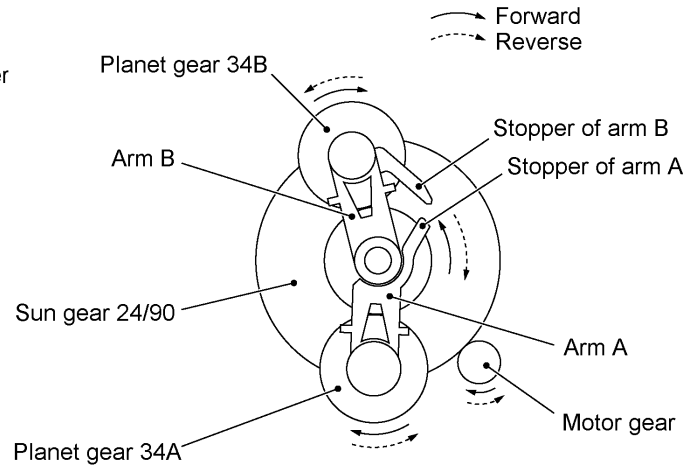

[1] Scanning mode (Solenoid: OFF, Motor rotation: Reverse)

In the scanning mode, the control electronics deactivates the solenoid. When the motor rotates in the reverse direction, the clutch lever turns counterclockwise with the compression spring so that its cutout ⓧ becomes engaged with the stopper of arm A. Once arm A is locked, planet gear 34A ("J") will not be engaged with any other gear but simply idle.

The motor's rotational torque turns sun gear 24/90 ("B") clockwise so that planet gear 34B ("C") transmits the torque via gear "D" to gear "E" which drives the separation roller gear ("G") and gear "F." As gear "F" rotates, the LF roller gear ("I") and document ejection roller gear ("H") also rotate.

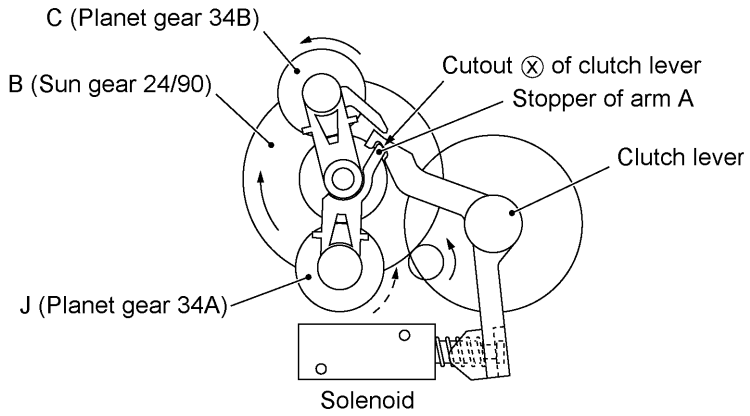

Arm A Locked by Cutout ⓧ of Clutch Lever

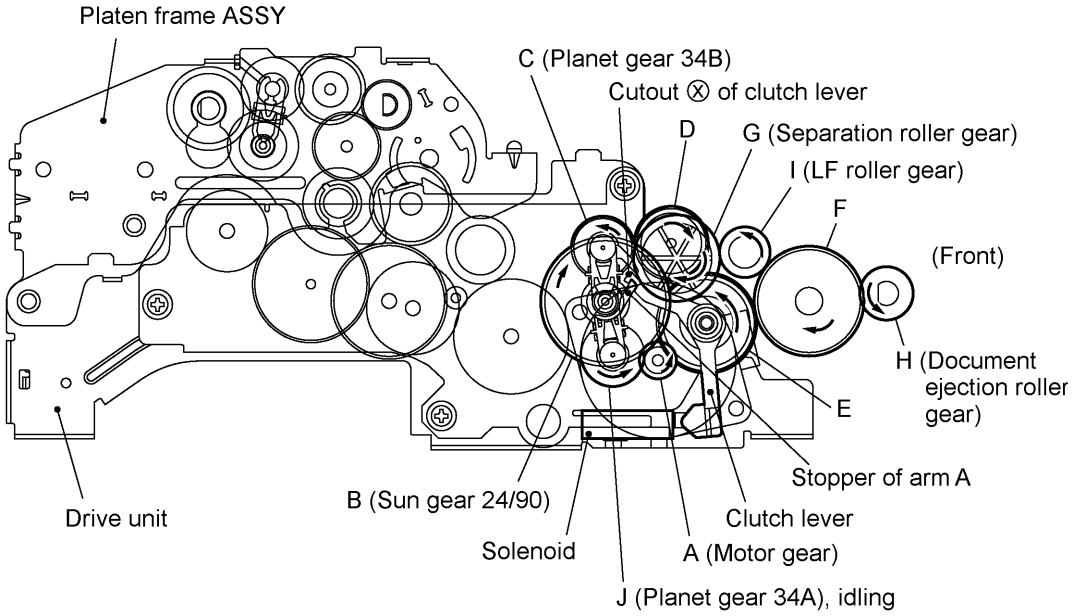

Active Gears

[2] Paper feeding/ejecting mode (Solenoid: ON, Motor rotation: Reverse)

In the paper feeding/ejecting mode, the control electronics activates the solenoid to release the stopper of arm A. When the motor rotates in the reverse direction, sun gear 24/90 ("B") rotates clockwise so that planet gear 34A ("J") transmits the torque via sun gear 65/60 ("K") and other gears to the paper feed roller gear ("T") and paper ejection roller gear ("R").

Since the stopper of arm B is blocked by section ⓨ of the clutch lever, the planet gear 34B ("C") is merely idle without engaging with any other gear.

The rotational torque of the paper ejection roller gear ("R") is transmitted to the inner gear of the clutch gear ASSY ("S"). However, the outer gear does not rotate since it is engaged with the platen gear ("Y") that undergoes the heavy frictional torque of the platen. (This clutch gear ASSY works as a one-way clutch. If the outer gear is driven by the platen gear ("Y"), the inner gear also rotates. Refer to [3] Recording mode.)

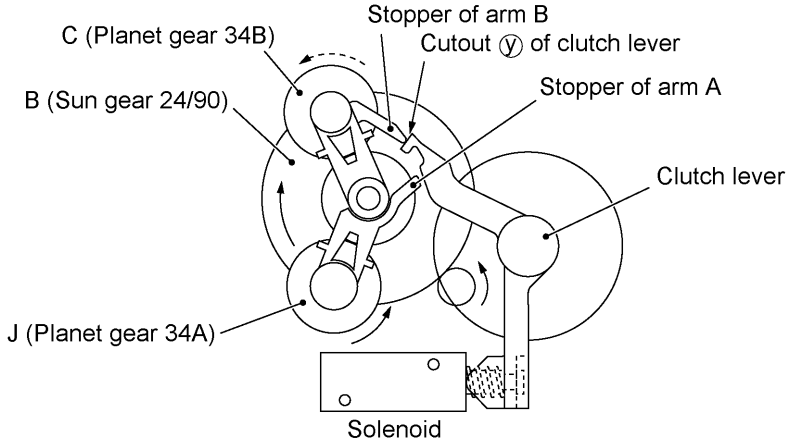

Arm B Blocked by Section ⓨ of Clutch Lever

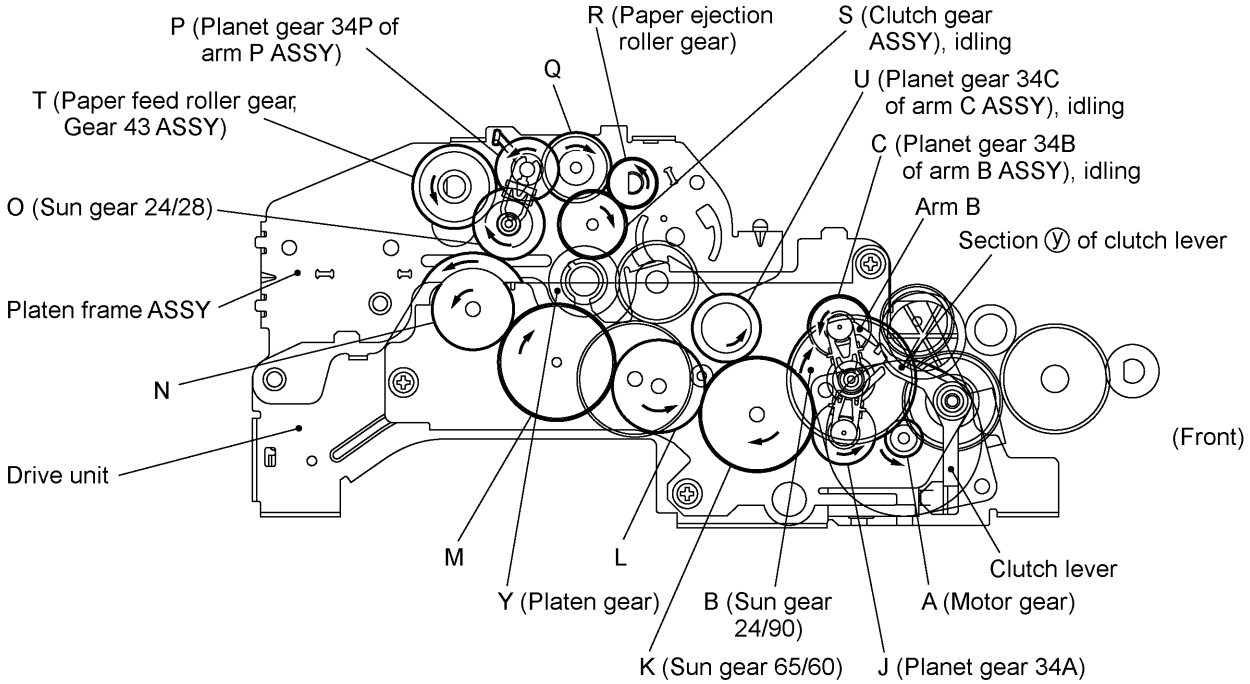

Active Gears

[3] Recording mode (Solenoid: OFF, Motor rotation: Forward)

In the recording mode, the control electronics deactivates the solenoid. When the motor rotates in the forward direction, the clutch lever turns counterclockwise with the compression spring so that its cutout ⓧ becomes engaged with the stopper of arm A. Once arm A is locked, planet gear 34A ("J") will not be engaged with any other gear but simply idle.

The motor's rotational torque turns sun gear 24/90 ("B") counterclockwise so that planet gear 34B ("C") transmits the torque via sun gear 65/60 ("K") and other gears to the platen gear ("Y") and the paper ejection roller gear ("R").

If gear 39/62 ("V") of the friction torque transmission ASSY rotates, gear 20 ("z") on the inner side of the drive unit also rotates so as to drive the ribbon drive gear ("w") that rotates the ribbon take-up gear ("a") on the ribbon cartridge, as shown on the next page.

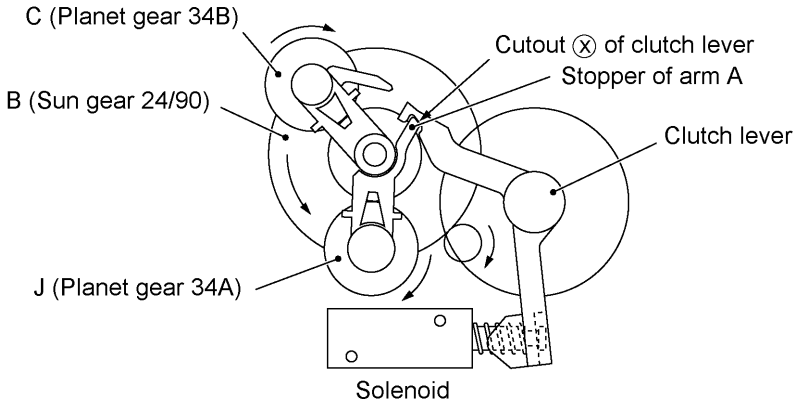

Arm A Locked by Cutout ⓧ of Clutch Lever

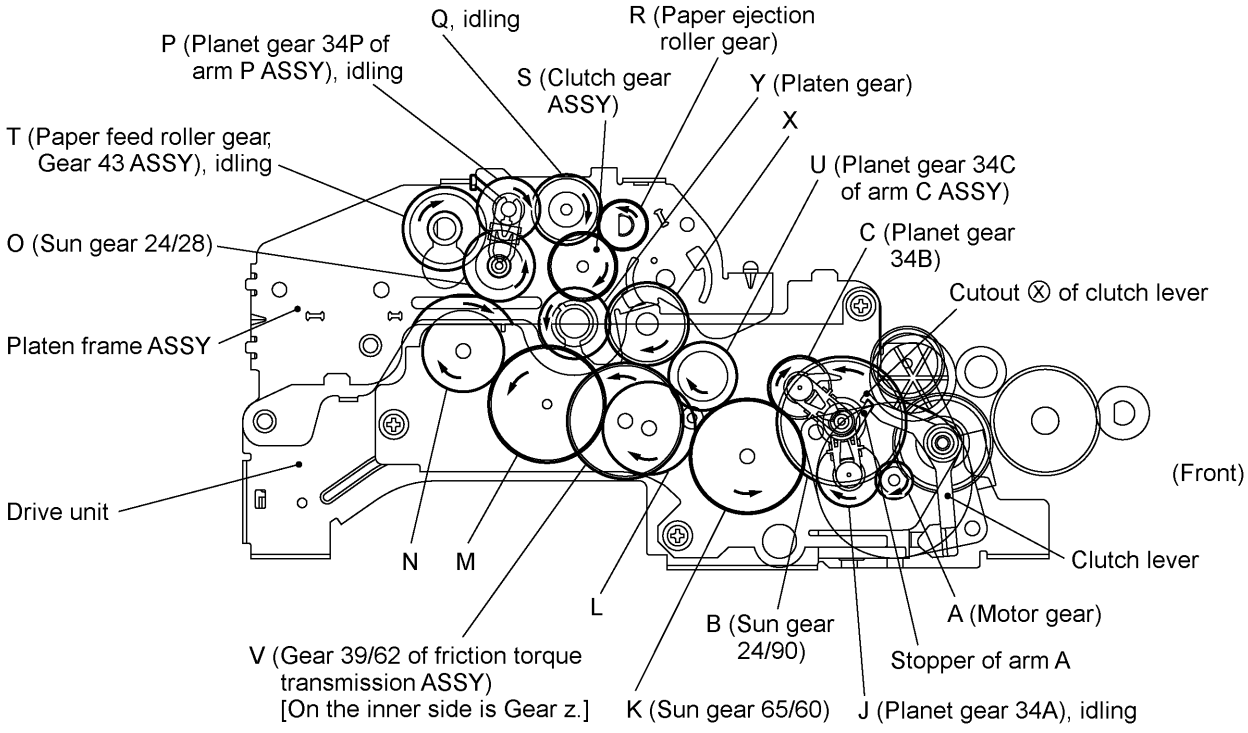

Active Gears on the Outer Side of the Drive Unit and Left Side of the Platen Frame

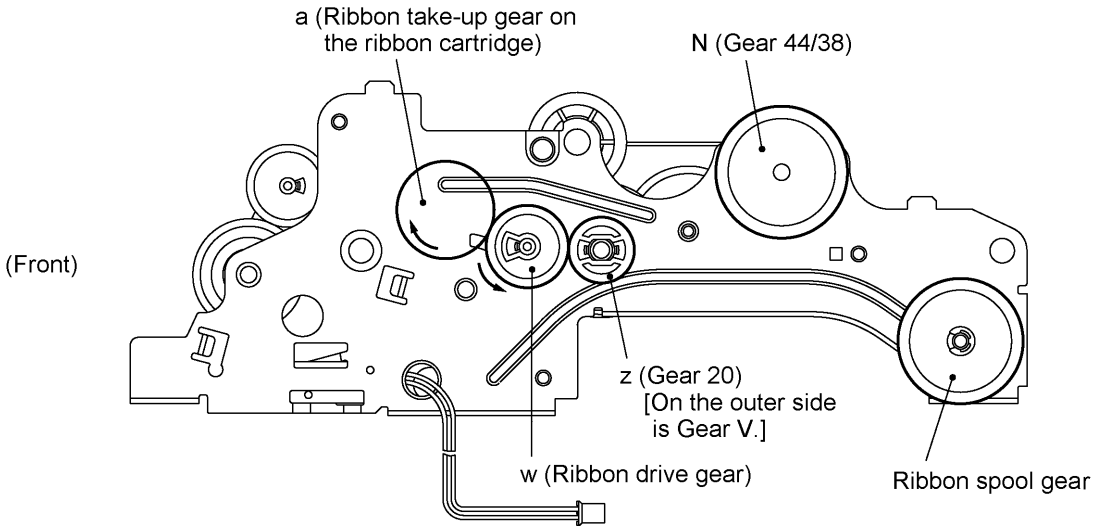

Active Gears on the Inner Side of the Drive Unit

[4] Copying mode (Solenoid: ON, Motor rotation: Forward)

In the copying mode, the control electronics activates the solenoid to release the stopper of arm A from the clutch lever. When the motor rotates in the forward direction, sun gear 24/90 ("B") rotates counterclockwise so that planet gear 34A ("J") transmits the torque to the document scanner mechanism (e.g., the separation roller gear ("G"), LF roller gear ("I") and document ejection roller gear ("H")) and planet gear 34B ("C") transmits the torque to the recording mechanism (e.g., platen gear ("Y") and paper ejection roller gear ("R")).

If gear 39/62 ("V") rotates, gear 20 ("z") on the inner side of the drive unit also rotates so as to drive the friction torque transmission ASSY and ribbon drive gear ("w") that rotates ribbon take-up gear ("a") on the ribbon cartridge, as shown on the next page.

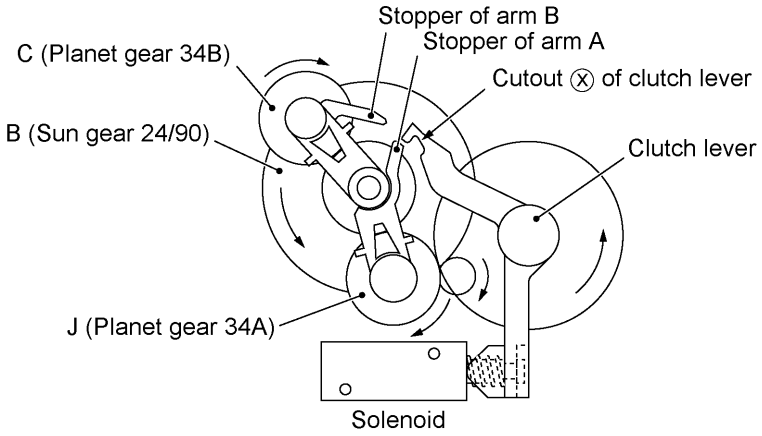

Arm A Released from Cutout ⓧ of Clutch Lever

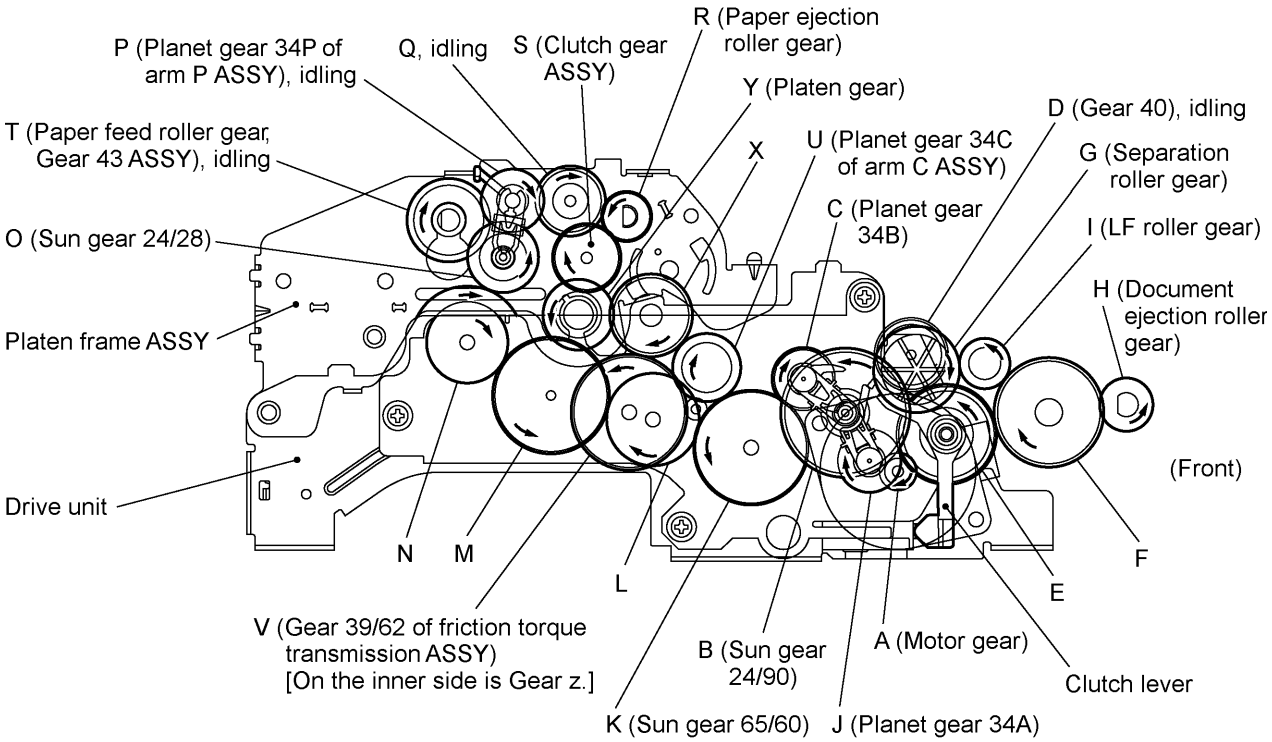

Active Gears on the Outer Side of the Drive Unit and on the Left Sides of the Platen Frame, Main Frame and Control Panel ASSY

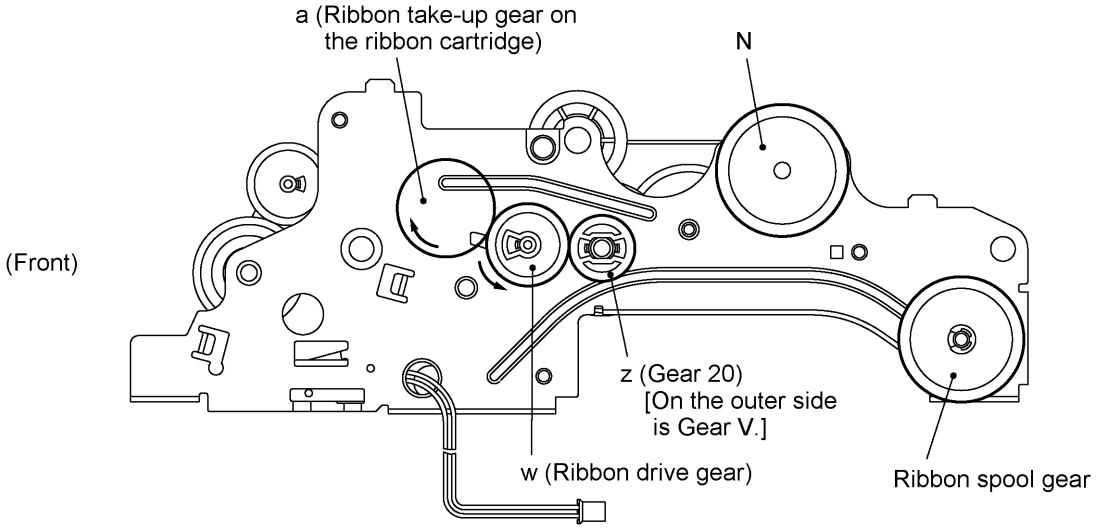

Active Gears on the Inner Side of the Drive Unit

2.3.4 Power transmission route

Rotation of the motor gear is transmitted as shown below.

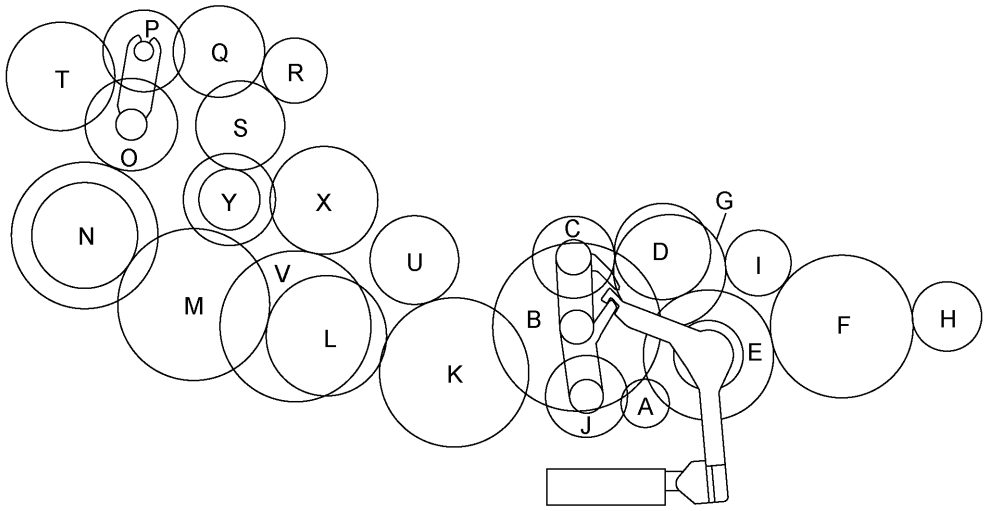

Gears on the outer side of the drive unit and on the left sides of the platen frame, main frame and control panel ASSY

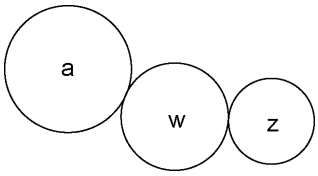

Gears on the inner side of the drive unit

A: Motor gear
B: Sun gear 24/90
C: Planet gear 34B
D: Gear 40
E: Gear 18/54
F: Gear 37
G: Separation roller gear
H: Document ejection roller gear
I: LF roller gear
J: Planet gear 34A
K: Gear 65/60
L: Gear 50
M: Gear 63
N: Gear 44/38
O: Sun gear 24/28
P: Planet gear 34P
Q: Gear 19/38
R: Paper ejection roller gear
S: Clutch gear ASSY
T: Paper feed roller gear, Gear 43 ASSY
U: Planet gear 34C
V: Friction torque transmission ASSY (Gear 39/62)
w: Ribbon drive gear (Gear 25)
X: Gear 22/28
Y: Platen gear (Gear 25/27)
z: Gear 20
a: Ribbon take-up gear on the ribbon cartridge

[1] Scanning Mode (Solenoid: OFF, Motor rotation: reverse)

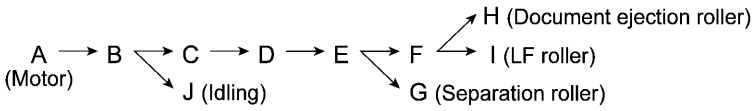

[2] Paper Feeding/Ejecting Mode (Solenoid: ON, Motor rotation: reverse)

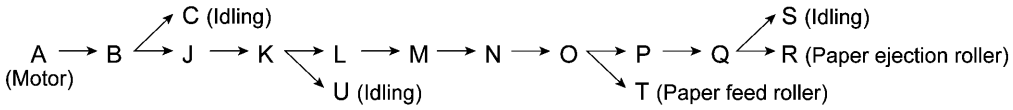

[3] Recording Mode (Solenoid: OFF, Motor rotation: forward)

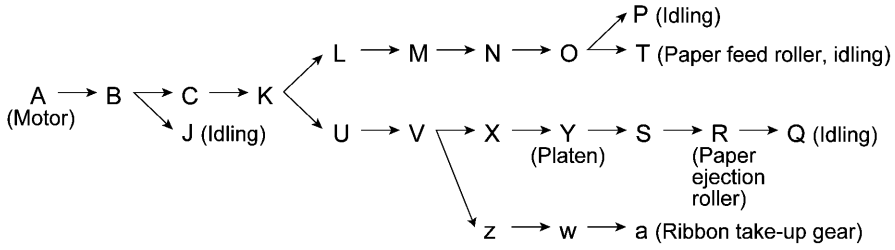

[4] Copying Mode (Solenoid: ON, Motor rotation: forward)

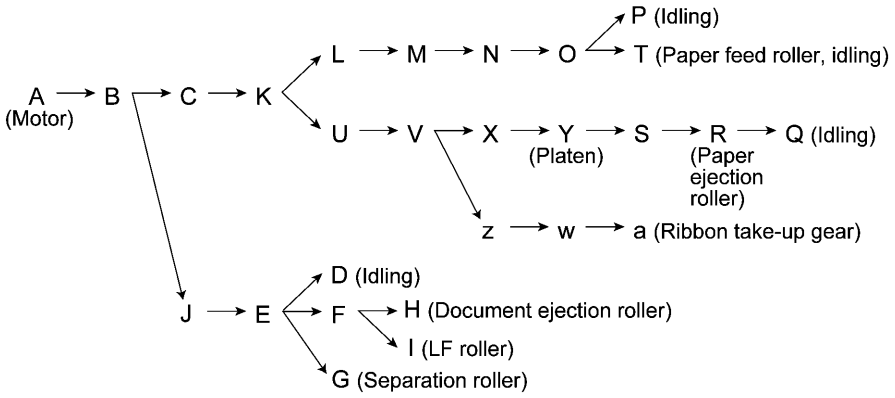

2.4 Sensors and Actuators

This equipment has five photosensors and two mechanical switches as described below.

Sensor name	Type	Located on
Document front sensor	Photosensor	Control panel PCB ASSY
Document rear sensor	Photosensor (PI2)	Main PCB
Paper-edge sensor	Photosensor (PH1)	Sensor PCB
Paper ejection sensor	Photosensor (PH2)	Sensor PCB
Ribbon sensor	Photosensor (PI1)	Main PCB
Cover sensor	Mechanical switch (SW1)	Main PCB
Hook switch sensor*	Mechanical switch (SW1)	Hook switch PCB

- Document front sensor which detects the presence of documents.
- Document rear sensor which detects the leading and trailing edges of pages to tell the control circuitry when the leading edge of a new page has reached the starting position and when the scan for that page is over.
- Paper-edge sensor which detects the leading and trailing edges of paper and the presence of paper as well as detecting whether the paper front cover is closed.
- Paper ejection sensor which detects whether a paper jam has occurred.
- Ribbon sensor which detects whether the ink ribbon is loaded.

These photosensors are a photointerrupter consisting of a light-emitting diode and a light-sensitive transistor. Each of them has an actuator separately arranged (see the following pages) except that the paper-edge sensor has two actuators for sensing the paper and the paper front cover. When an actuator is not activated, its black end lies in the path of light issued from the light-emitting diode and interrupts its light so that the emitted light does not enter the light-sensitive transistor. If a document, paper, or ribbon comes in so as to activate the actuator, the actuator's black end goes out of the light path and the emitted light enters the light-sensitive transistor. This way, the sensor detects the presence of documents, paper, or ink ribbon.

- Cover sensor which detects whether the recording paper cover ASSY is closed.
- Hook switch sensor* which detects whether the handset is placed on the handset mount.

The cover sensor has an actuator ASSY (consisting of two actuators and a spring). If you open the recording paper cover ASSY, the actuator ASSY pops up to release the sensor.

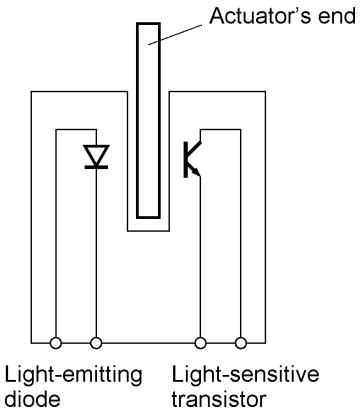

*Not provided on the FAX-910.

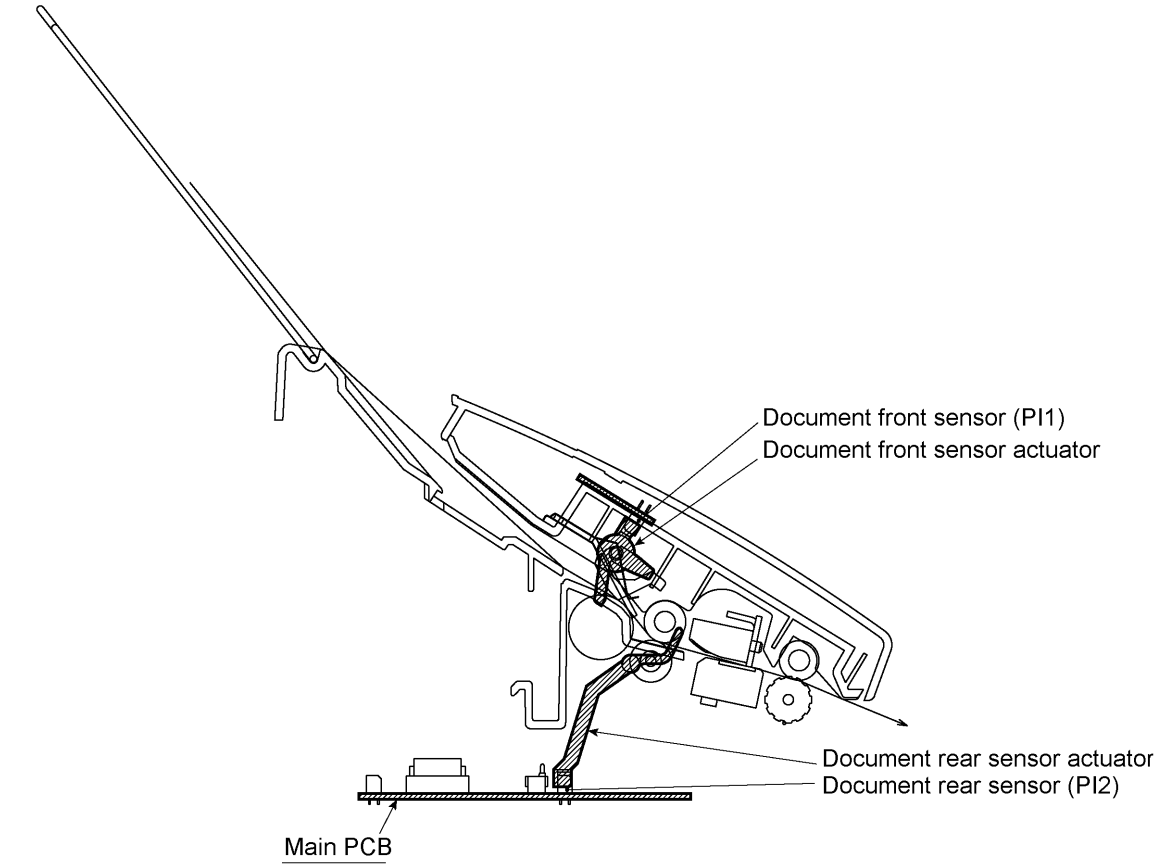

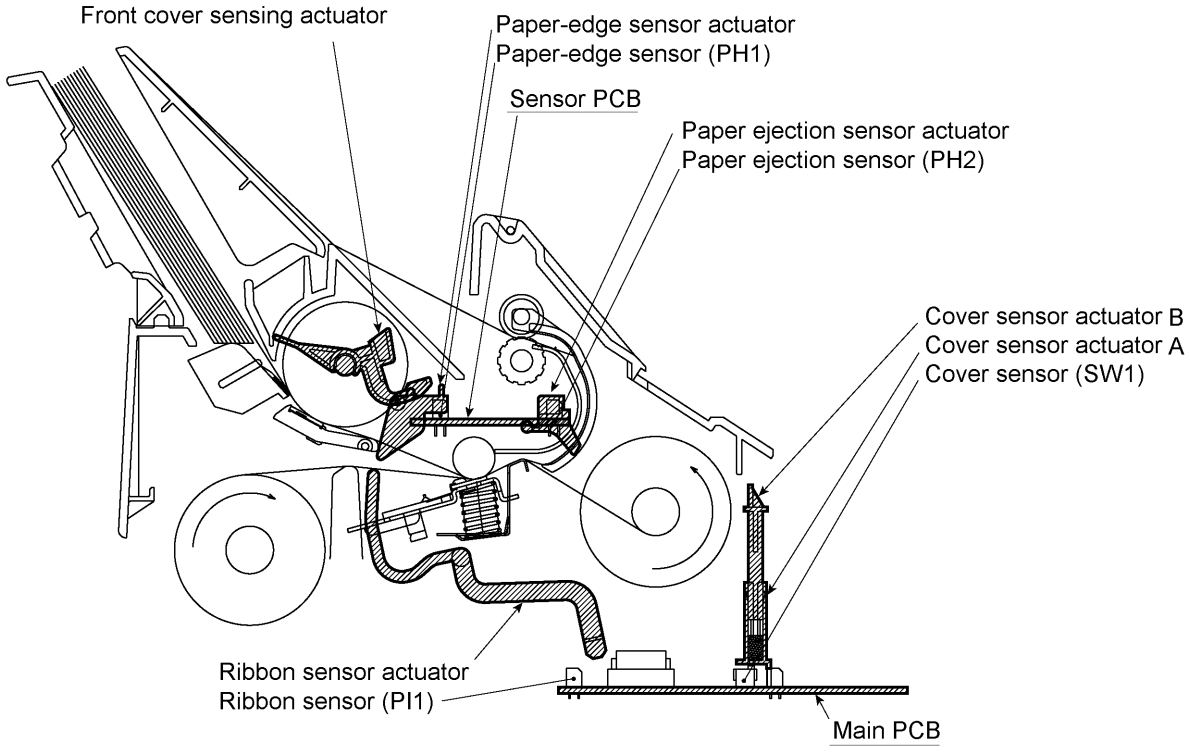

Location of Sensors and Actuators (1)

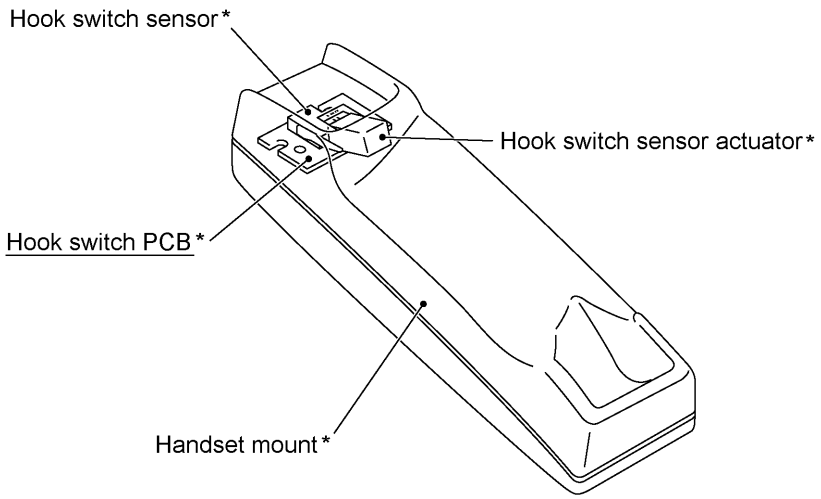

*Not provided on the FAX-910.

Location of Sensors and Actuators (2)

3. CONTROL ELECTRONICS

3.1 Configuration

The hardware configuration of the facsimile equipment is shown below.

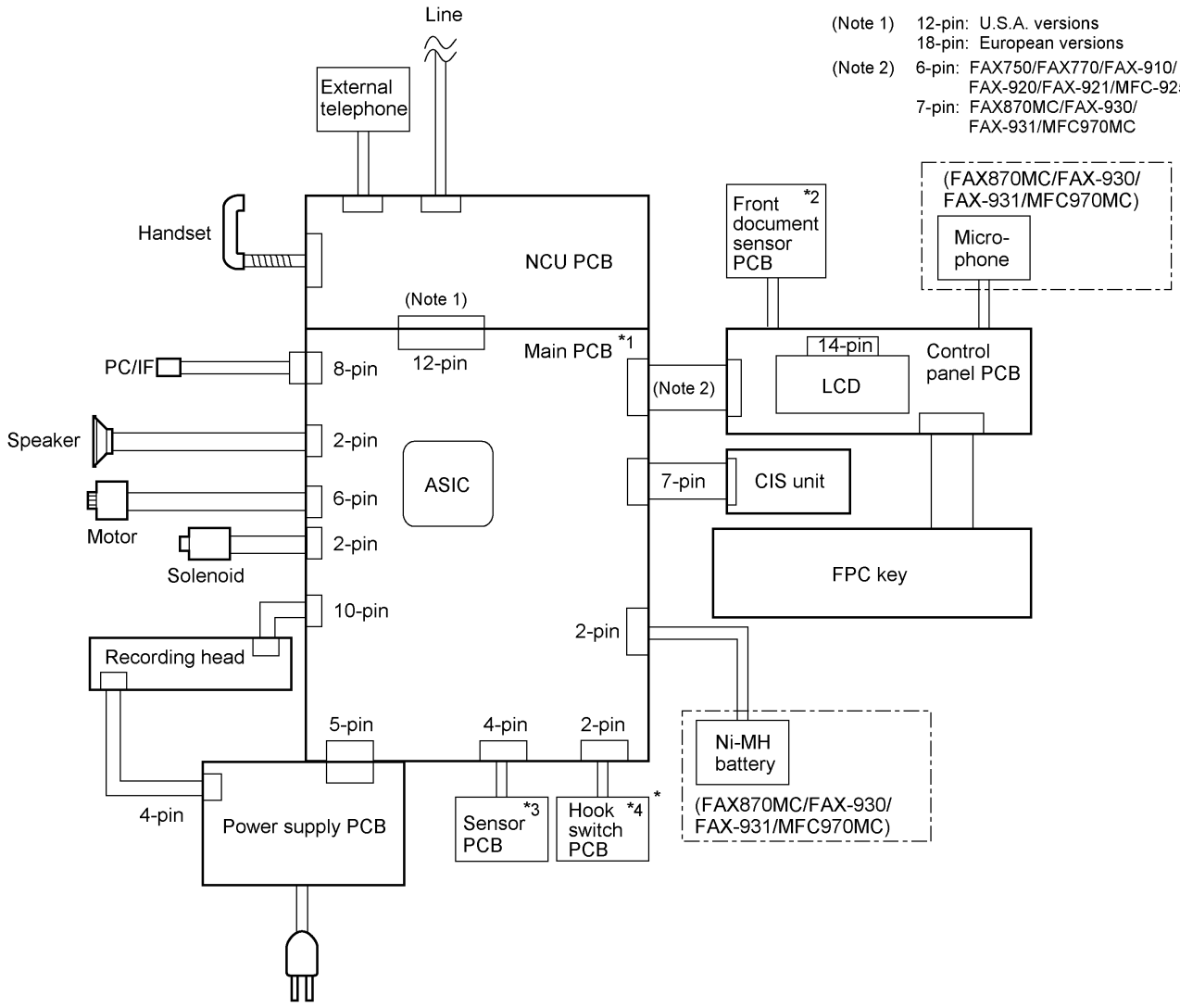

*1 On the main PCB are these sensors:
- Ribbon sensor (PI1)
- Document rear sensor (PI2)
- Cover sensor (SW1)

*2 On the front document sensor PCB is the front document sensor.

*3 On the sensor PCB are these sensors:
- Paper-edge sensor (PH1)
- Paper ejection sensor (PH2)

4 On the hook switch PCB is the hook switch sensor (SW1).

*Not provided on the FAX-910.

Configuration of Facsimile Equipment

3.2 Main PCB

The main PCB, which is the nucleus controlling the entire operation of the equipment, consists of a FAX engine (ASIC), memories, motor drive circuitry, sensor detection circuitry, and analog circuits for scanning, recording, and power transmission shifting.

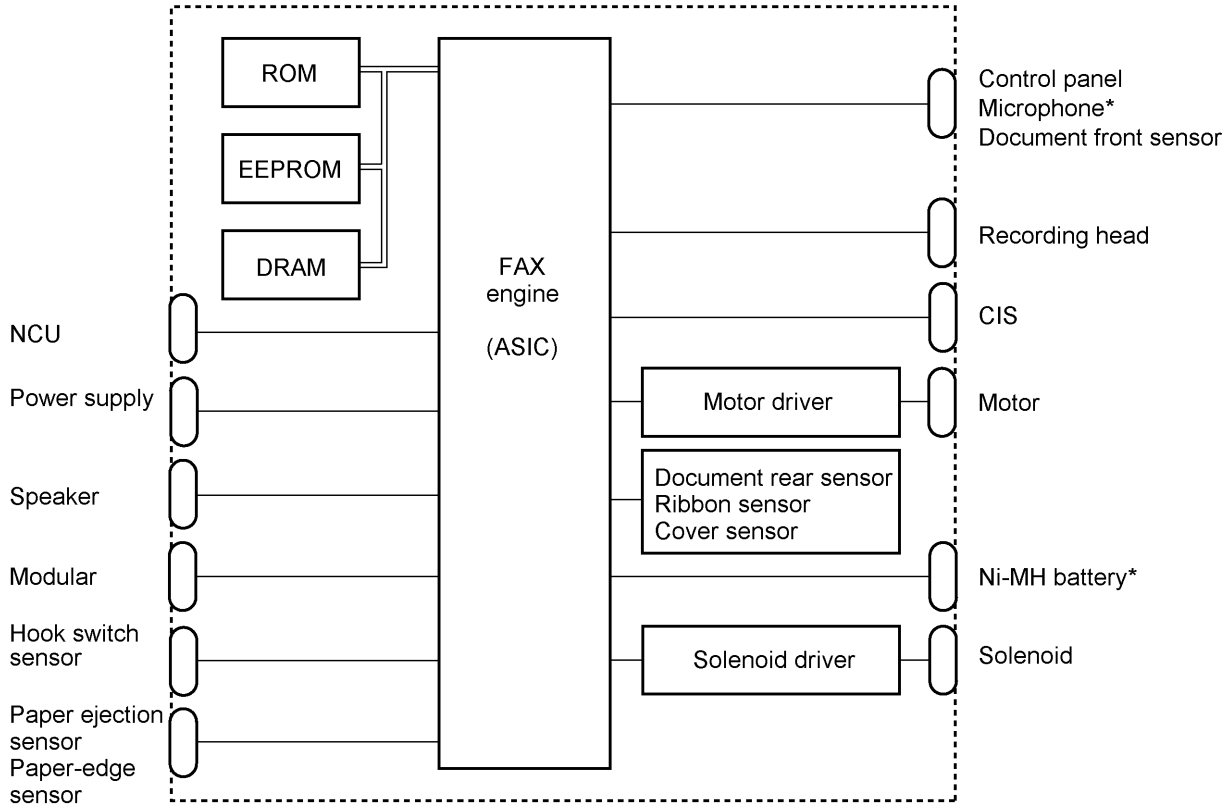

*Provided on the FAX870MC/FAX-930/FAX-931/MFC970MC.

EEPROM: Electrically Erasable Programmable Read-only Memory
DRAM: Dynamic Random Access Memory

Block Diagram of Main PCB

FAX750/FAX770/FAX-910/FAX-920/FAX-921/MFC-925

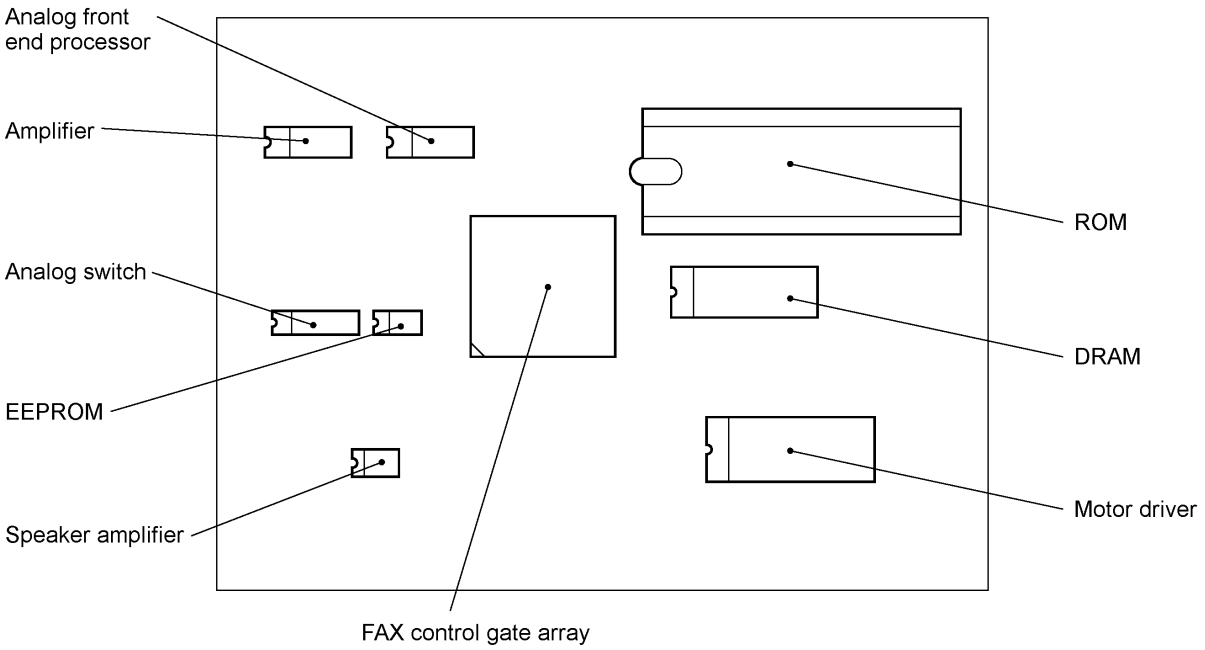

FAX870MC/FAX-930/FAX-931/MFC970MC

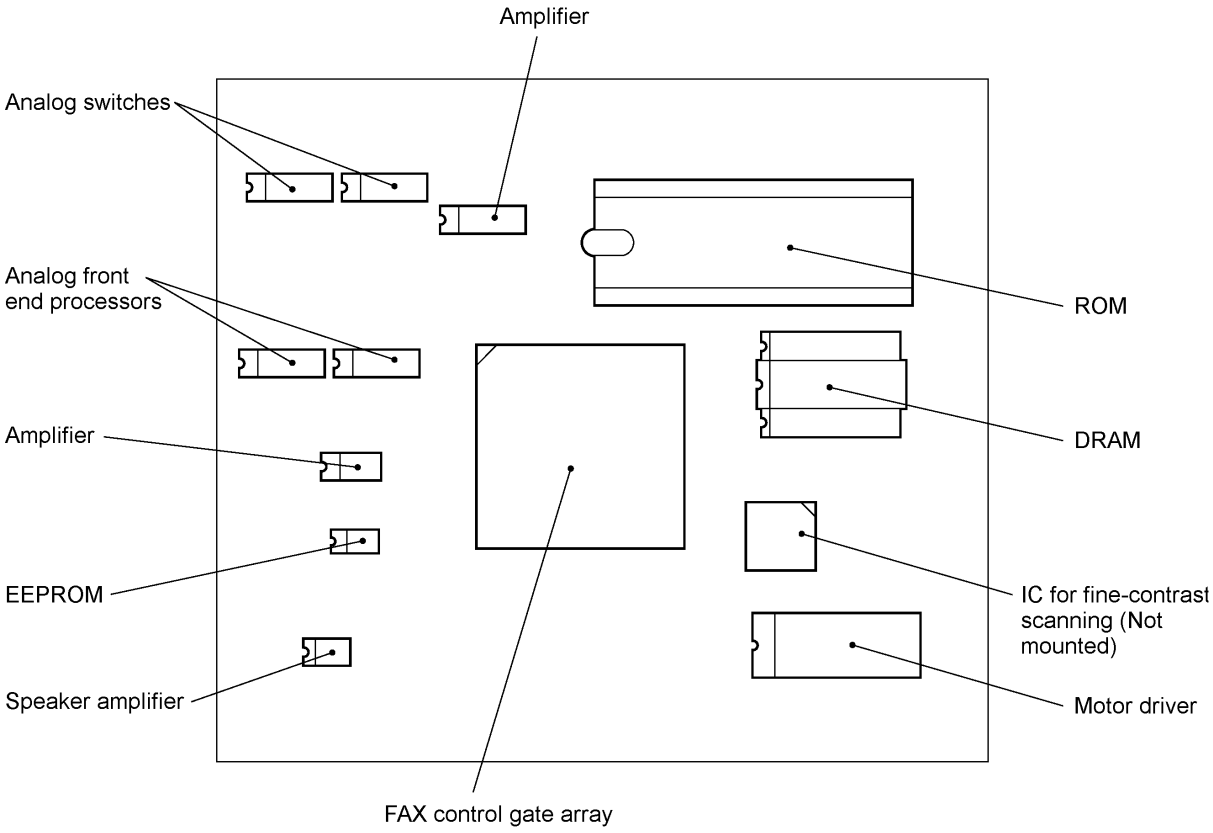

3.3 NCU PCB

The NCU PCB switches the communications line to telephone or built-in MODEM, under the control of the main PCB.

U.S.A. versions

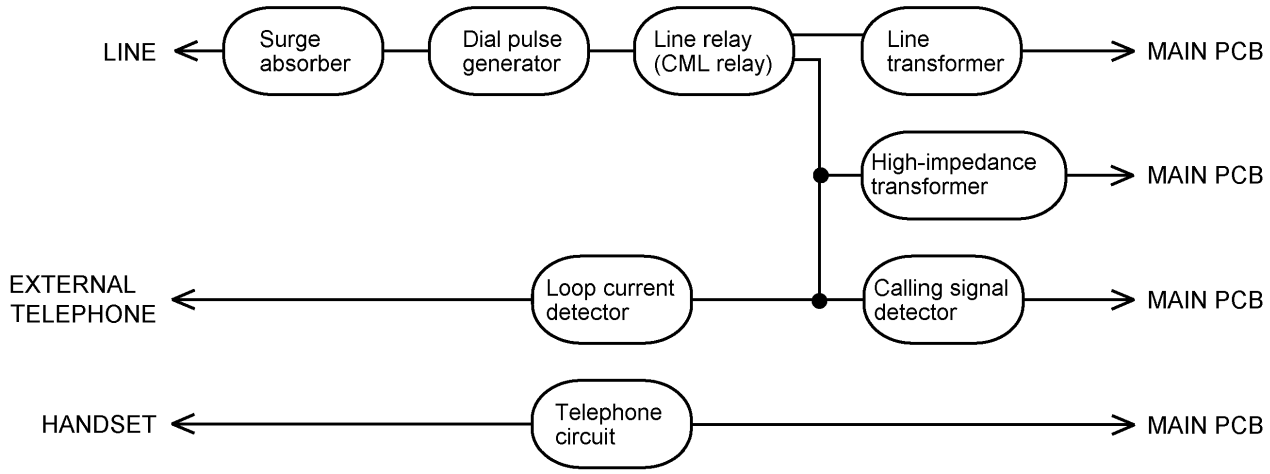

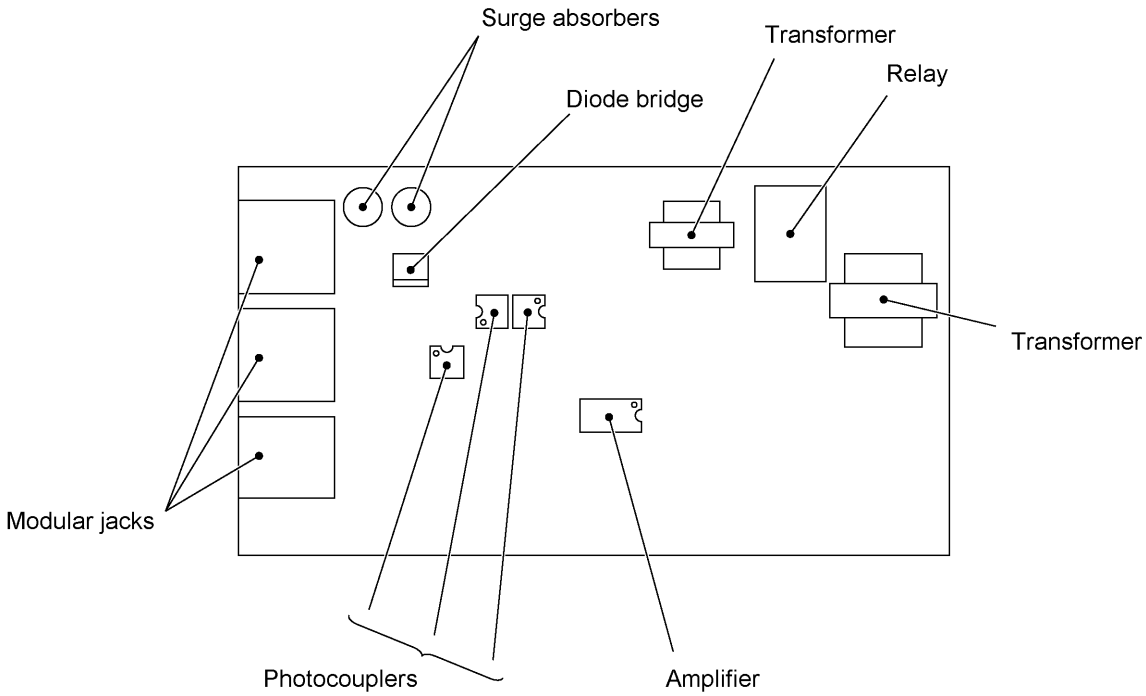

European versions

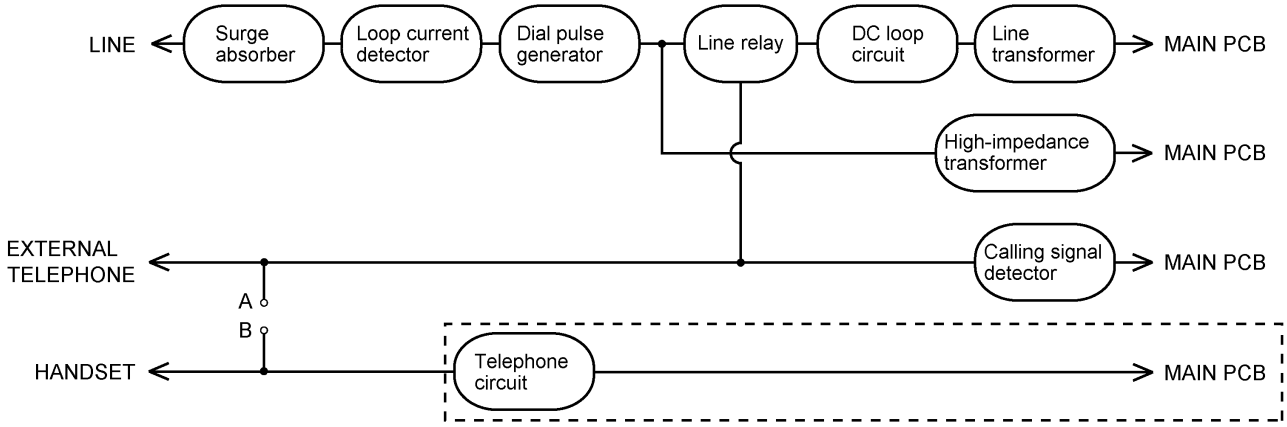

NOTE: For models equipped with a power failure phone, the circuit enclosed in a dotted line does not apply and points A and B are short circuited together.

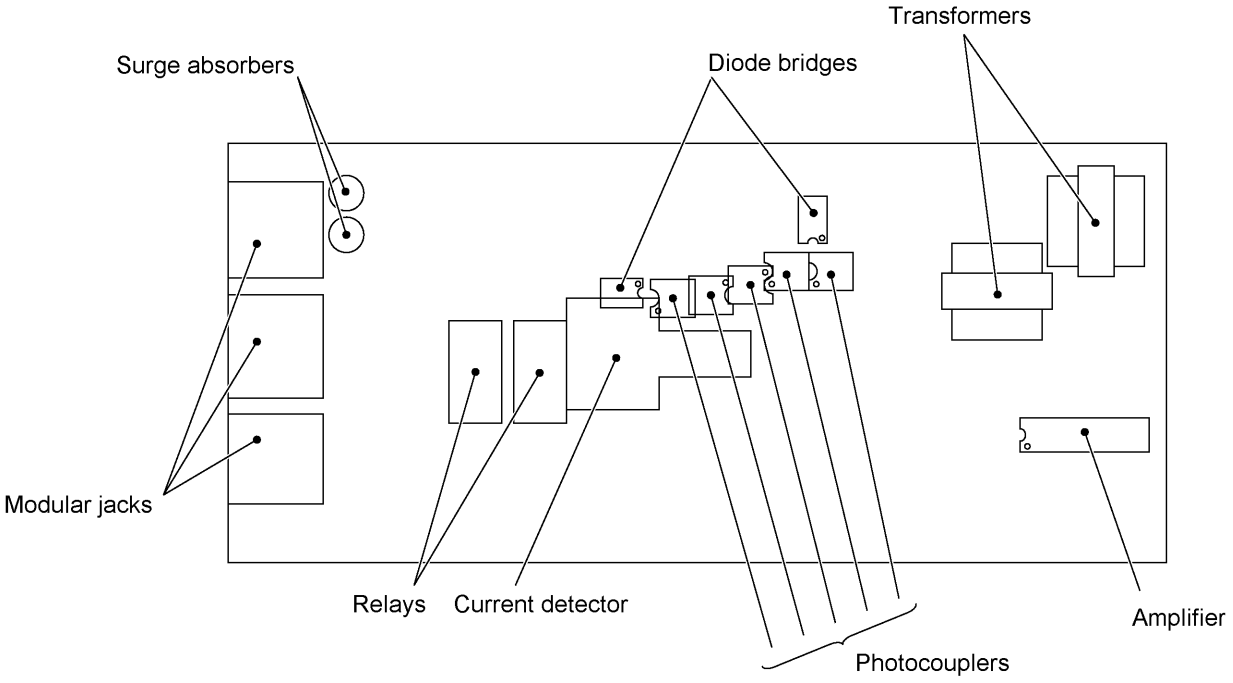

3.4 Control Panel PCB

The control panel PCB and the main PCB communicate with each other by serially transmitting commands and data.

The control panel unit consists of a gate array, an LCD and LEDs, which are controlled by the gate array according to commands issued from the FAX engine on the main PCB.

The calendar clock is backed up by the backup circuit on the main PCB.

The panel FPC is a flexible keyboard PCB which integrates the key matrix having rubber keytops.

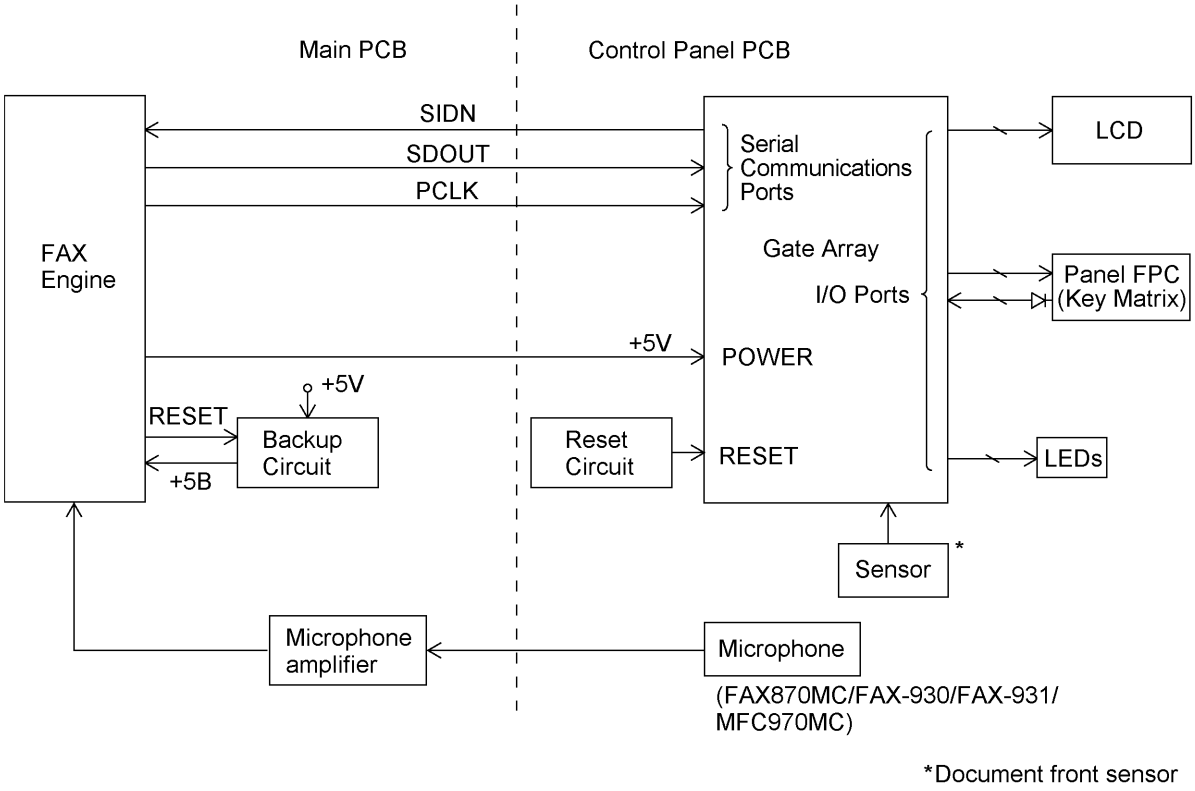

Control Panel PCB and its Related Circuit

3.5 Power Supply PCB

The power supply uses the switching regulator to generate DC power (+25V, +6.5V, and +5V) from a commercial AC power line.

The +25V source is stabilized and fed to the motor and solenoid (for feeding documents, recording paper, and ink ribbon), recording head, the main PCB, and the CIS LED array.

The +6.5V source is not stabilized and fed to the Ni-MH battery (on the FAX870MC/FAX-930/FAX-931/MFC970MC). The +5V source is fed to the logic on the main PCB, control panel, recording head, and sensors.

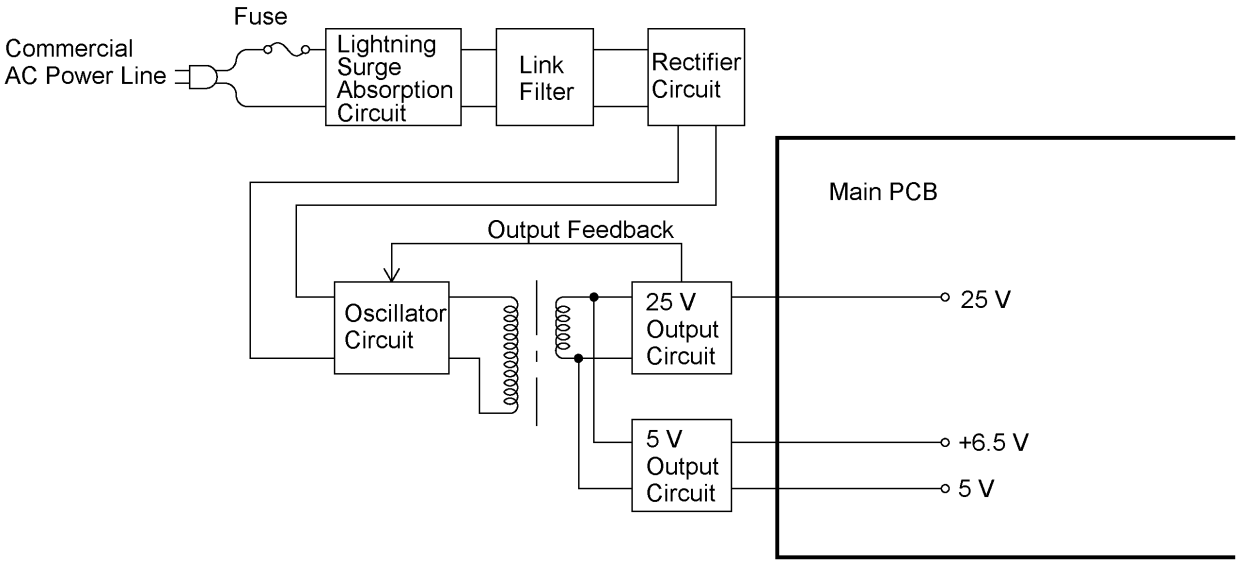

Power Supply Circuit

CHAPTER IV.

DISASSEMBLY/REASSEMBLY, LUBRICATION AND ADJUSTMENT

CONTENTS

1. DISASSEMBLY/REASSEMBLY IV-1

n Safety Precautions IV-1

Tightening Torque List IV-2

n Preparation IV-3

n How to Access the Object Component IV-3

n Disassembly Order Flow IV-4

1.1 ROM Cover, Battery ASSY* and Ribbon Shaft Stopper IV-5

1.2 Control Panel ASSY IV-7

1.3 Panel Rear Cover and Control Panel IV-9

1.4 LF Roller ASSY and CIS Unit IV-14

1.5 Head Protector, Recording Head ASSY, Head Adjuster, and Recorder Frame IV-18

1.6 Recording Paper Cover ASSY and Paper Guides* IV-22

1.7 Lock Levers, Chute B ASSY, Gears, Paper Ejection Roller, Paper Feed Roller ASSY, Pressure Plate, Paper Feed Chute and Other Components on the Platen Frame IV-23

1.8 Cover Stopper and Platen Frame ASSY IV-34

1.9 Bottom Plate IV-36

1.10 Power Supply PCB, Main PCB, and NCU PCB IV-37

1.11 Speaker, PC I/F Modular ASSY, and Ribbon Shaft Stopper Spring IV-40

1.12 Drive Unit, Motor, and Main-Head Harness IV-41

1.13 Panel-lock Leaf Springs IV-42

1.14 Cover Sensor Actuators and Pinch Roller IV-43

1.15 Document Rear Sensor Actuator, Separation Roller, and Ribbon Sensor Actuator IV-44

1.16 Handset Mount,* Hook Switch PCB,* and Dummy Mount** IV-45

1.17 Harness Routing IV-46

2. LUBRICATION IV-47

[1] Control panel ASSY IV-47

[2] LF roller ASSY IV-49

[3] Platen frame ASSY IV-49

[4] Separation roller and main frame IV-51

1. DISASSEMBLY/REASSEMBLY

n Safety Precautions

To prevent the creation of secondary problems by mishandling, observe the following precautions during maintenance work.

(1) Unplug the power cord from the power outlet before replacing parts or units. When having access to the power supply, be sure to unplug the power cord from the power outlet.

(2) Be careful not to lose screws, washers, or other parts removed for parts replacement.

(3) When using soldering irons and other heat-generating tools, take care not to damage the resin parts such as wires, PCBs, and covers.

(4) Before handling the PCBs, touch a metal portion of the equipment to discharge static electricity; otherwise, the electronic parts may be damaged due to the electricity charged in your body.

(5) When transporting PCBs, be sure to wrap them in conductive sheets such as aluminum foil.

(6) Be sure to reinsert self-tapping screws correctly, if removed.

(7) Tighten screws to the torque values listed on the next page.

(8) When connecting or disconnecting cable connectors, hold the connector bodies not the cables. If the connector has a lock, always slide the connector lock to unlock it.

(9) Before reassembly, apply the specified lubricant to the specified points. (Refer to Section 2 in this chapter.)

(10) After repairs, check not only the repaired portion but also that the connectors and other related portions function properly before operation checks.

Tightening Torque List

Location	Screw type	Q'ty	Tightening torque (kg•cm)	Loosening torque (kg•cm)
ADF parts	Taptite, pan (washer) B M3x6	1	4 ±2	Min. 1
Panel rear cover	Taptite, cup B M3x8	2	4 ±2	Min. 1.5
Document front sensor PCB	Taptite, cup B M2.6x6	1	4 ±2	Min. 1
Control panel PCB*	Taptite, cup B M2.6x6	1	4 ±2	Min. 1
LF leaf spring	Taptite, bind B M3x8	1	5 ±2	Min. 2
CIS holders	Taptite, bind B M3x8	2	4 ±1	Min. 2
CIS unit	Taptite, pan B M3x8	1	5 ±2	Min. 2
Recorder frame	Taptite, cup B M3x8	2	5 ±2	Min. 2
Recording paper cover ASSY	Shoulder screw	2	7 ±2	Min. 3
Paper feed chute	Taptite, cup S M3x6	2	5 ±2	Min. 4
Cover stopper	Taptite, cup B M3x8	1	5 ±2	Min. 1.5
Bottom plate	Taptite, cup B M3x8	7	5 ±2	Min. 1.5
Grounding terminal	Screw, pan (washer) M4x6DB	1	7 ±2	Min. 4
Motor	Screw, pan (washer) M3x6DB	1	7 ±2	Min. 3.5

* The control panel PCB of the FAX870MC/FAX-930/FAX-931/MFC970MC is secured with a screw.

n Preparation

Prior to proceeding to the disassembly procedure,

(1) Unplug

- the modular jack of the telephone line,
- the modular jack of the curled cord (and remove the handset), and
- the modular jack of an external telephone set if connected. (Not shown below.)

(2) Remove

- the document wire extension,
- the paper wire extension,
- the paper support, and
- the ribbon cartridge.

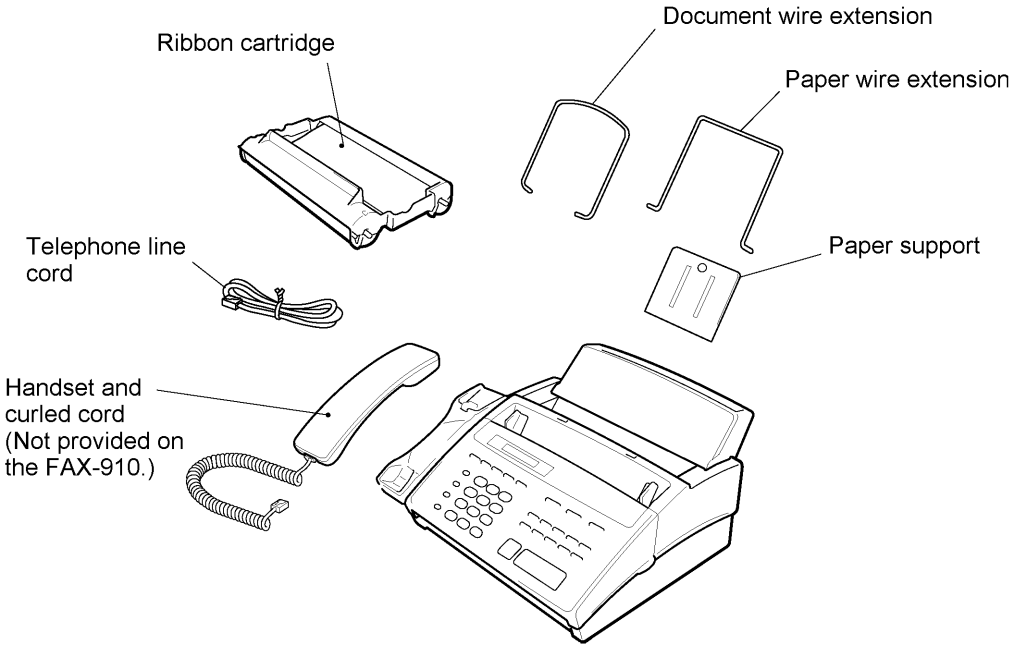

n How to Access the Object Component

- On the next page is a disassembly order flow which helps you access the object components. To remove the separation roller, for example, first find it on the flow and learn its number (⑮ in this case). You need to remove parts numbered ①, ⑥, ⑧, ⑨, ⑩, ⑫, and ⑭ so as to access the separation roller.
- Unless otherwise specified, the disassembled parts or components should be reassembled in the reverse order of removal.

n Disassembly Order Flow

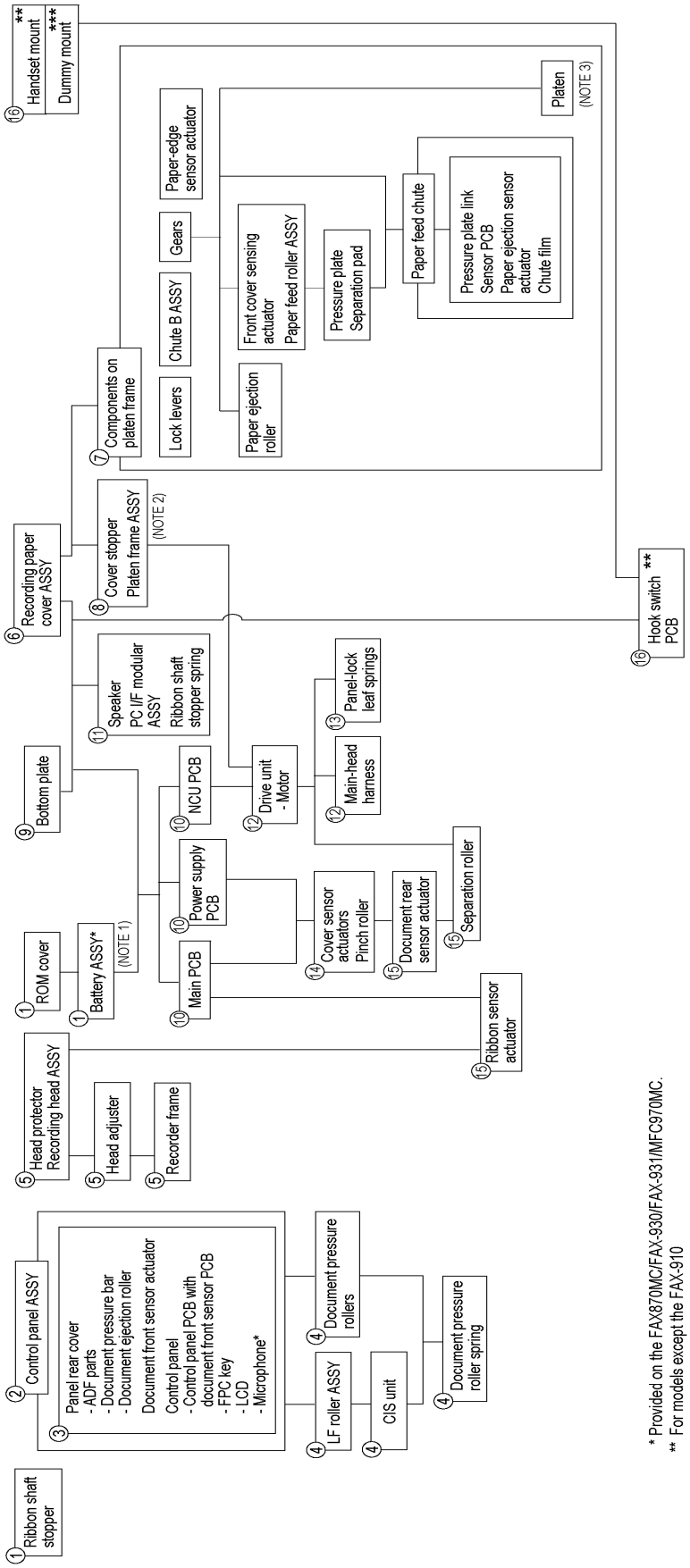

* Provided on the FAX870MC/FAX-930/FAX-931/MFC970MC.
** For models except the FAX-910
*** For the FAX-910

(NOTE 1) When accessing the main PCB, power supply PCB, or NCU PCB on the FAX870MC/FAX-930/FAX-931/MFC970MC, you need to remove the ROM cover and take out the battery ASSY from the main frame.

(NOTE 2) Only when you need to remove the platen frame ASSY, remove the cover stopper. In other cases, keep it in place for easier handling.

(NOTE 3) After removing the platen, NEVER close the platen frame ASSY when the recording head ASSY is set in place. Doing so will make the cutouts of the platen frame ASSY catch the right and left ends of the recording head ASSY. The platen frame ASSY and the recording head ASSY will be locked together.

1.1 ROM Cover, Battery ASSY* and Ribbon Shaft Stopper

(*FAX870MC/FAX-930/FAX-931/MFC970MC)

(1) Open the control panel ASSY to the front.

(2) Pull up the lock levers and open the recording paper cover ASSY to the rear.

(3) As shown below, insert the tip of the spring hook at the center or right half of the locking arm (when viewed from the front), then lift up the hook to release and move the ROM cover to the right.

(4) FAX870MC/FAX-930/FAX-931/MFC970MC: To replace the battery ASSY (Ni-MH battery), plug the power cord of the facsimile equipment into a wall socket, disconnect the battery harness from the main PCB, and take out the battery ASSY from the main frame. Set a new battery ASSY and unplug the power cord.

Disconnecting the battery harness with the power cord unplugged will lose the settings (e.g., calendar clock, voice messages, and received FAX data) stored in the RAM.

If you do not need to replace the battery ASSY, take out the battery ASSY from the main frame and put it on the main PCB with the battery harness being connected.

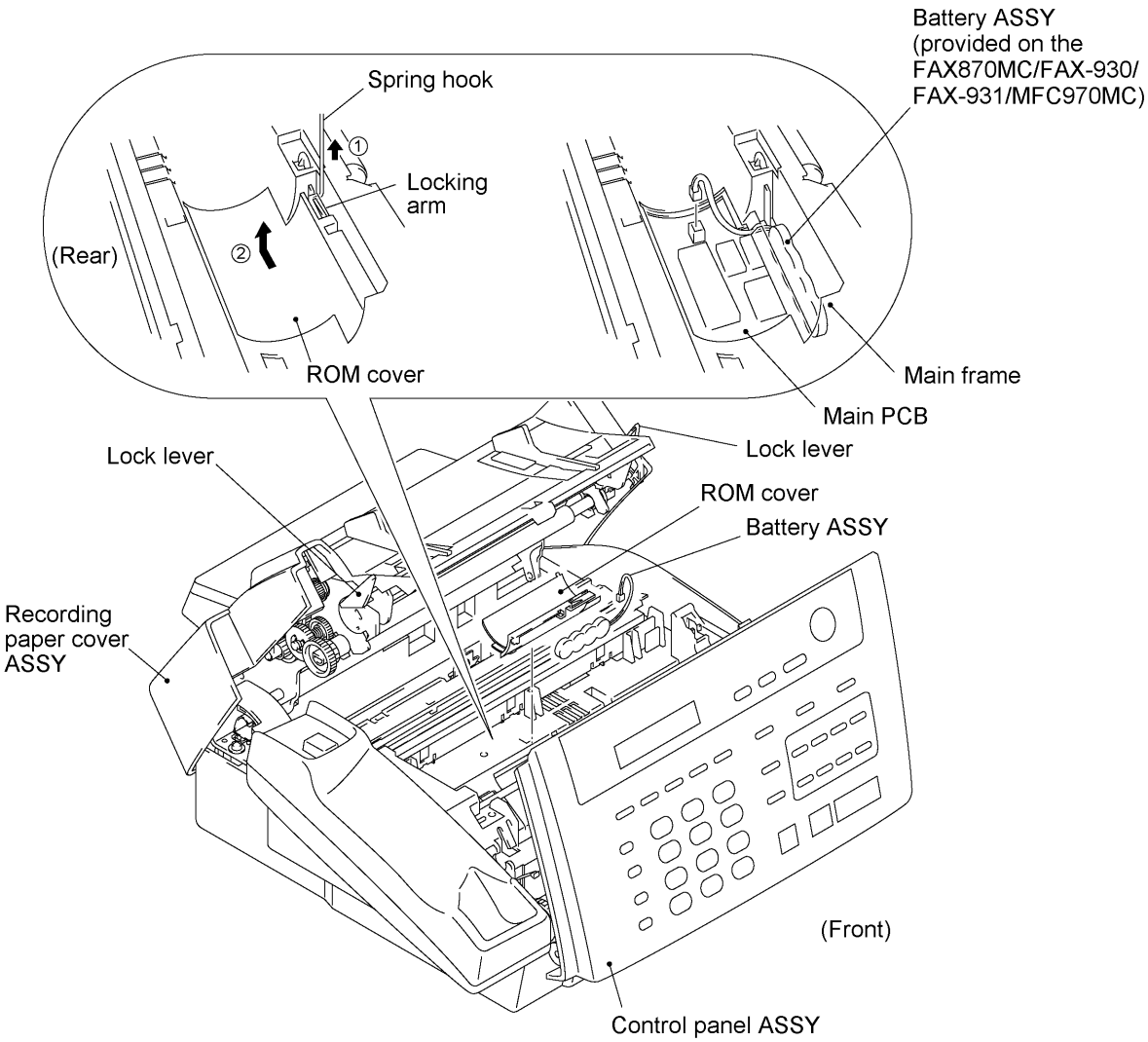

(5) Remove the ribbon shaft stopper by pushing down the rear end of the stopper lightly with a screwdriver.

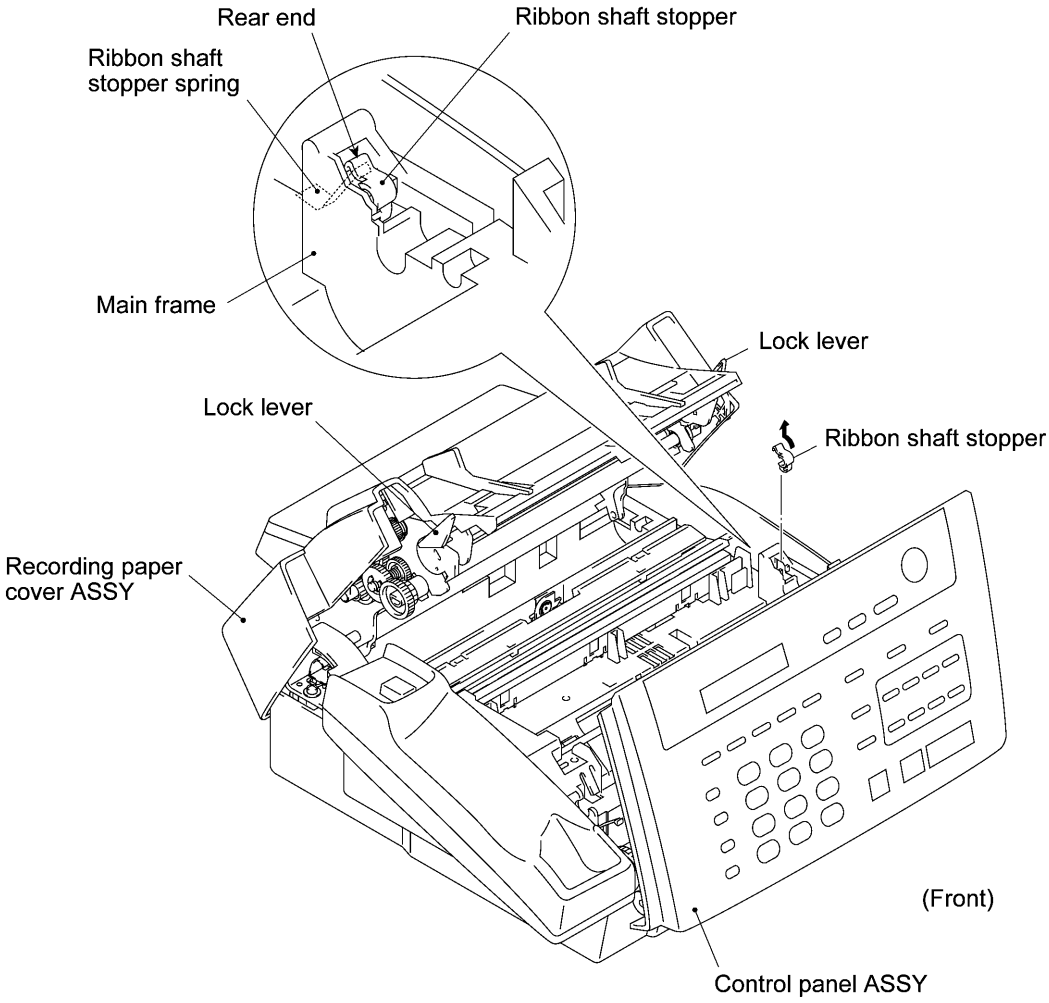

n Reassembling Notes

- When reinstalling the ribbon shaft stopper, lightly push down the ribbon shaft stopper spring with the rear end of the ribbon shaft stopper and then set the stopper.

1.2 Control Panel ASSY

(1) Open the control panel ASSY to the front.

(2) Push the right arm of the panel rear cover outward (in the direction of arrow •) to release it from the boss provided on the main frame, then move the control panel ASSY to the left and push the left arm outward (in the direction of arrow ,).

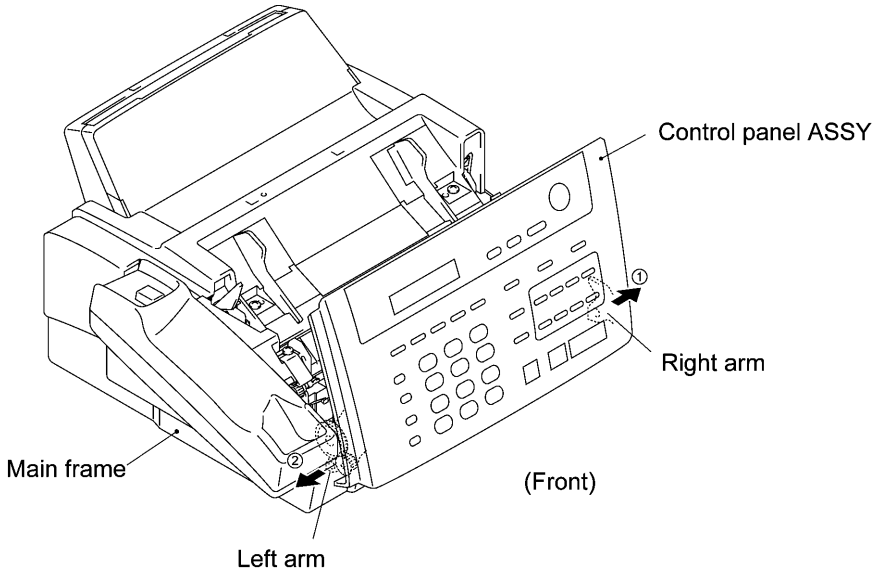

(3) Remove the harness holder by unhooking its latches from the panel rear cover with a flat screwdriver as shown below.

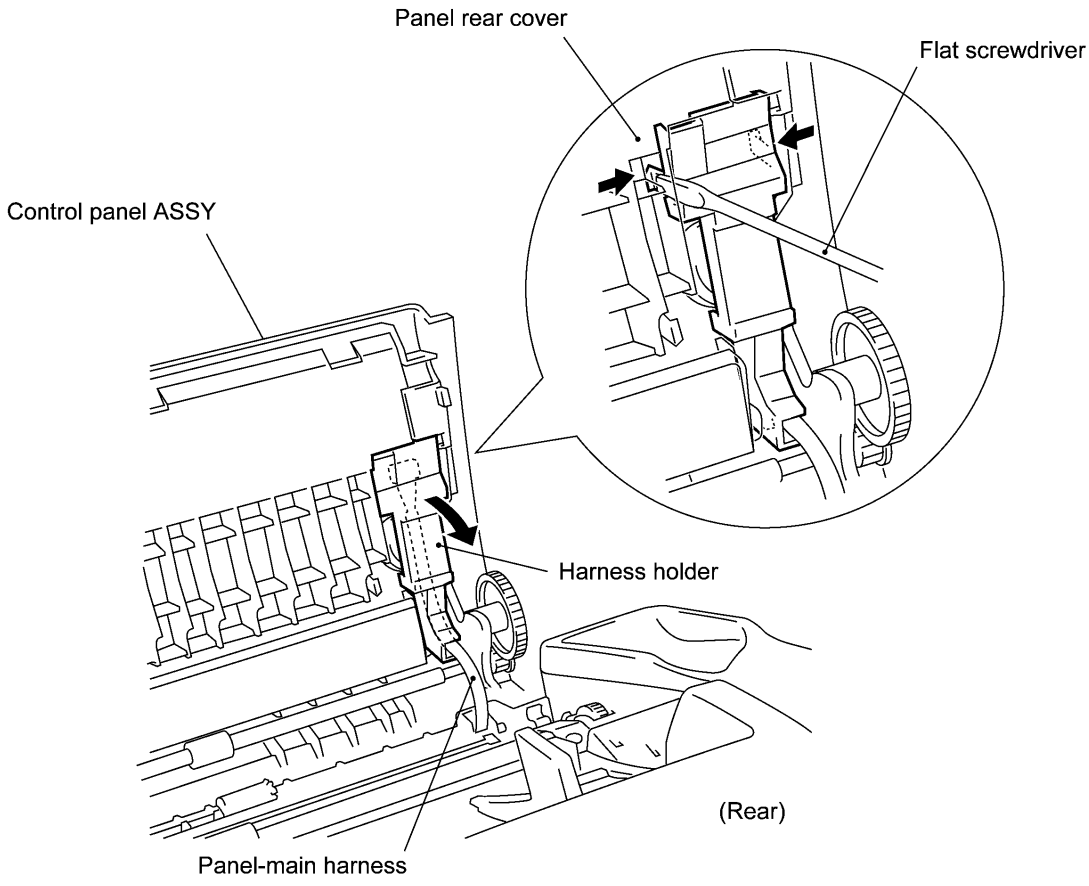

(4) Disconnect the panel-main harness.

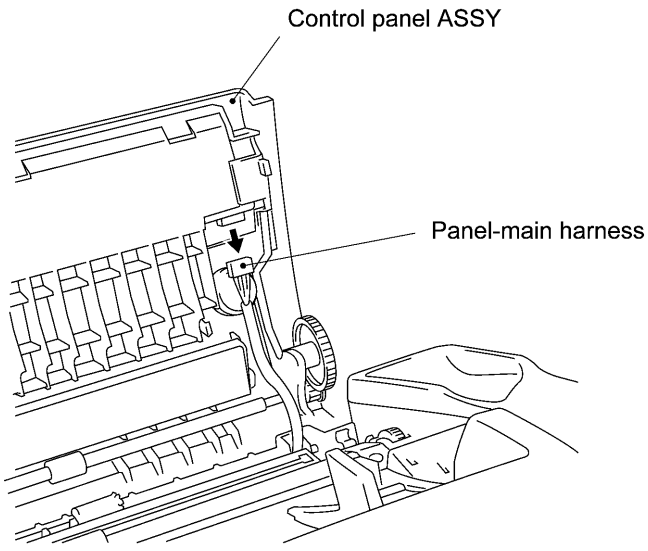

1.3 Panel Rear Cover and Control Panel

(1) Place the control panel ASSY upside down.

If you do not need to remove the ADF parts, document pressure bar, or document ejection roller, skip to step (6).

(2) To remove the ADF parts (spring covers, spring plates, and separation rubber), remove the screw.

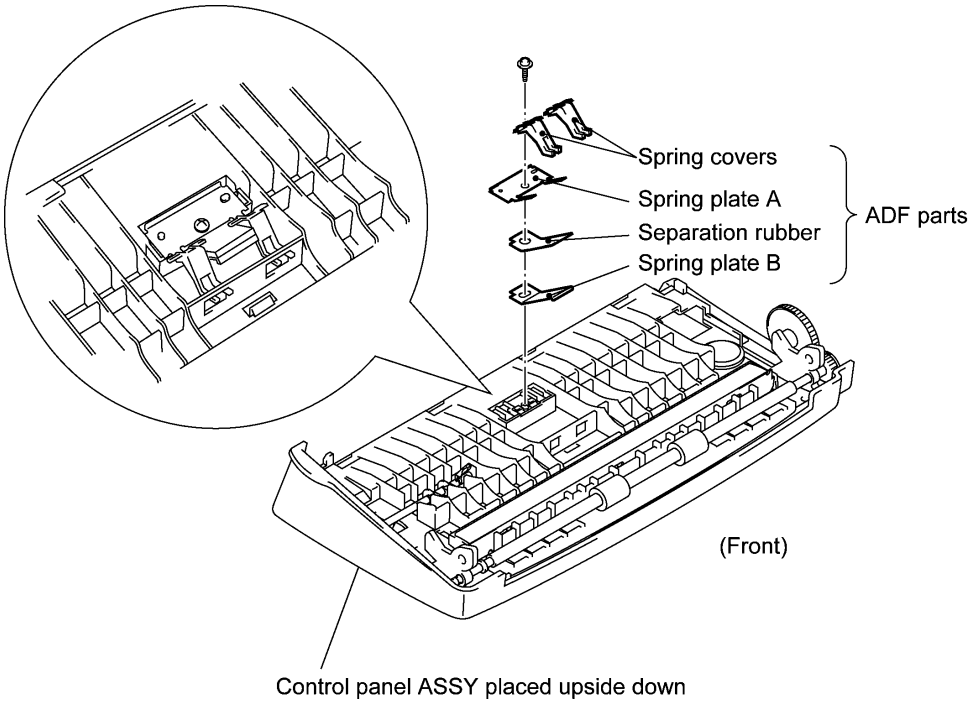

(3) To remove the document pressure bar ASSY, pull either of the supports provided on the panel rear cover outwards and lift up the pressure bar. The spring also comes off.

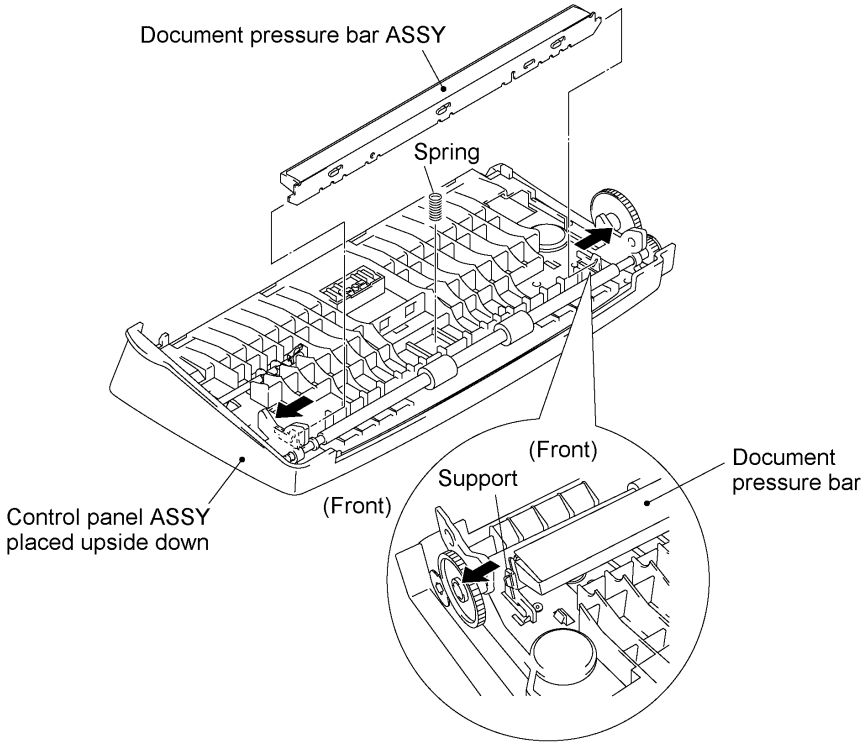

(4) To disassemble the document pressure bar ASSY, first remove the white film.

NOTE: Once removed, the white film will become unusable and a new one will have to be put back in.

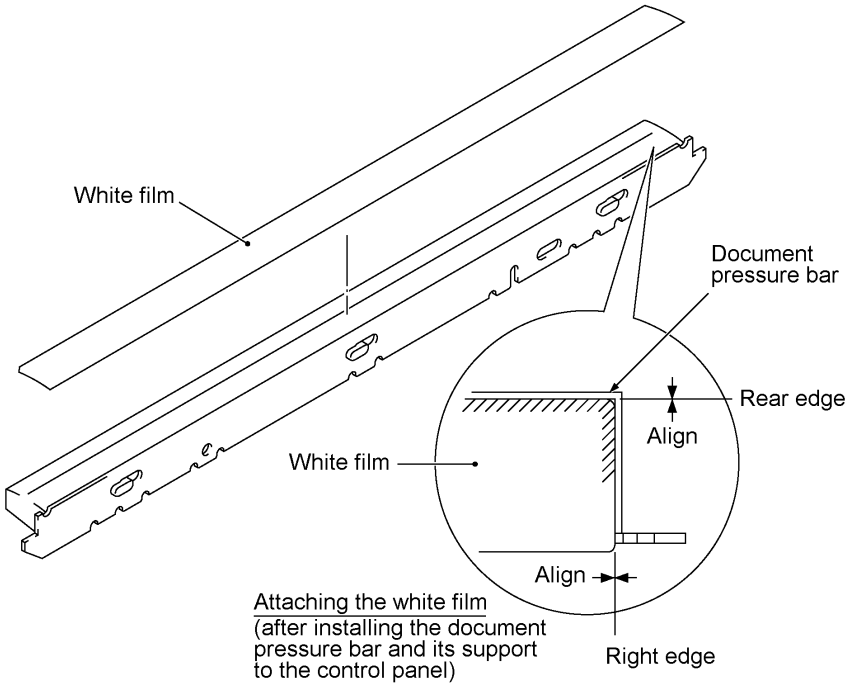

Next, place the document pressure bar ASSY with the pressure bar support facing up for easier disassembly. While pressing the boss of the document pressure bar with the tip of a Phillips screwdriver, shift the document pressure bar to the right to take it off from the pressure bar support.

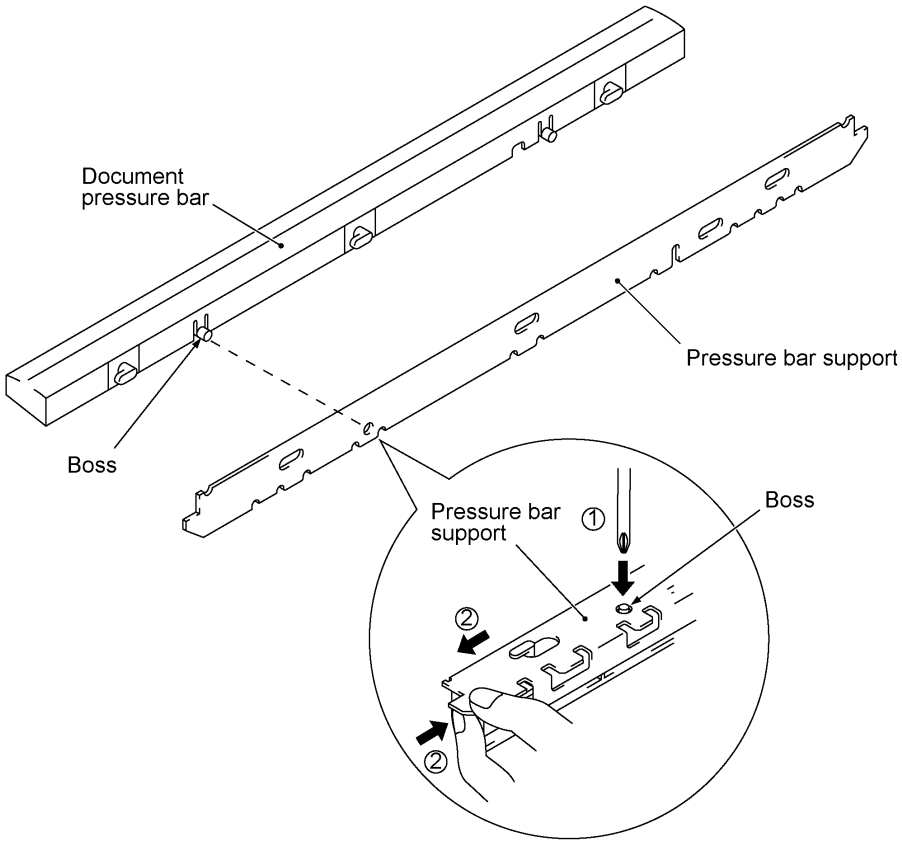

(5) To remove the document ejection roller, push the arm rib to the rear and shift the document ejection roller to the right.

Pull out the document ejection roller gear and remove gear 37.

Pull out the document ejection roller to the left.

Remove the bearing.

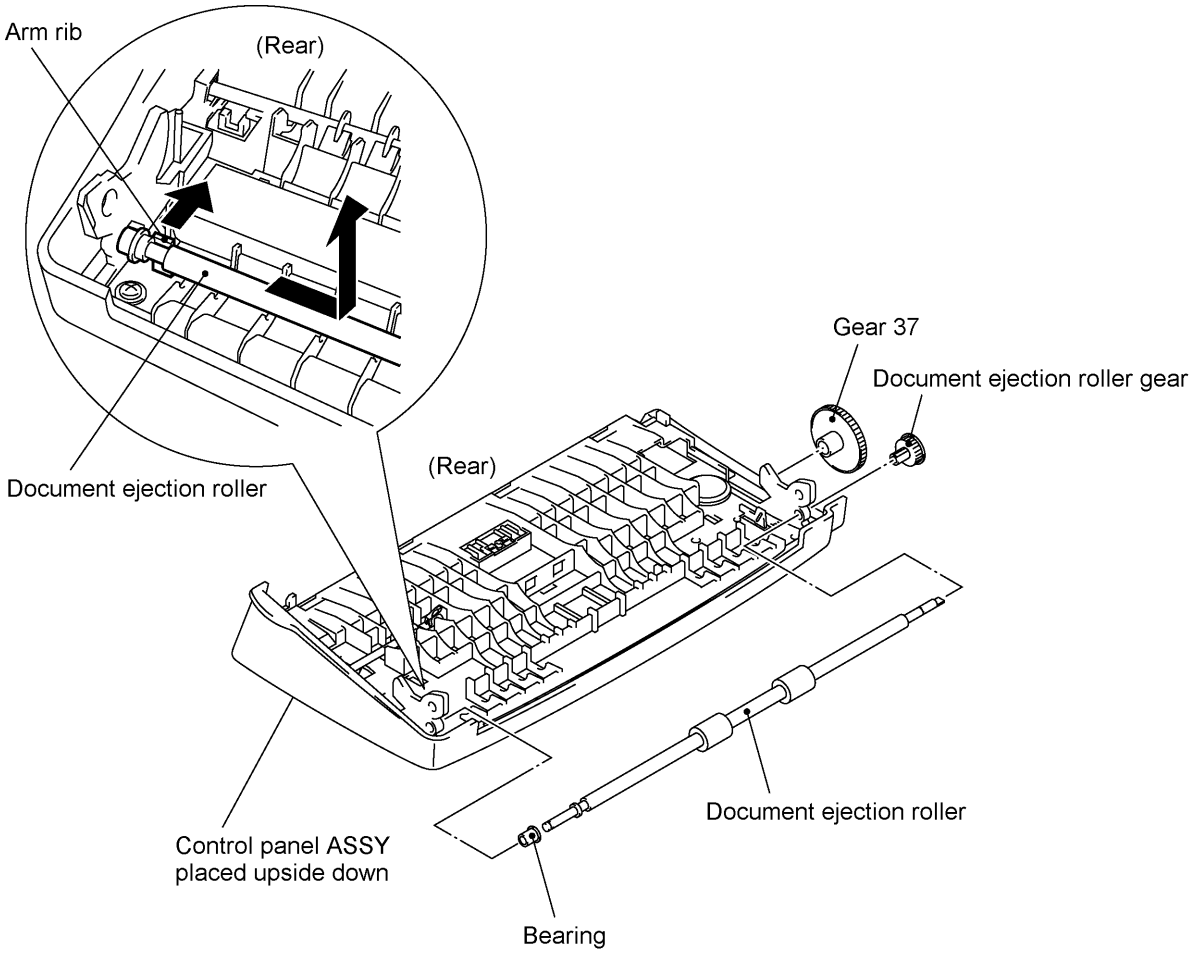

(6) Remove the two screws from the panel rear cover. (See the next page.)

(7) Unhook the panel rear cover from the four "X" latches provided on the control panel and lift up the panel rear cover.

(8) Remove the document front sensor actuator from the panel rear cover by turning it clockwise (in the direction of arrow •) and moving it in the direction of arrow , .

(9) Remove the screw from the document front sensor PCB.

(10) FAX750/FAX770/FAX-910/FAX-920/FAX-921/MFC-925: Unhook the control panel PCB from the two "Y" latches.

FAX870MC/FAX-930/FAX-931/MFC970MC: Remove the screw from the control panel PCB and unhook the PCB from the two "Y" latches. Disconnect the microphone.

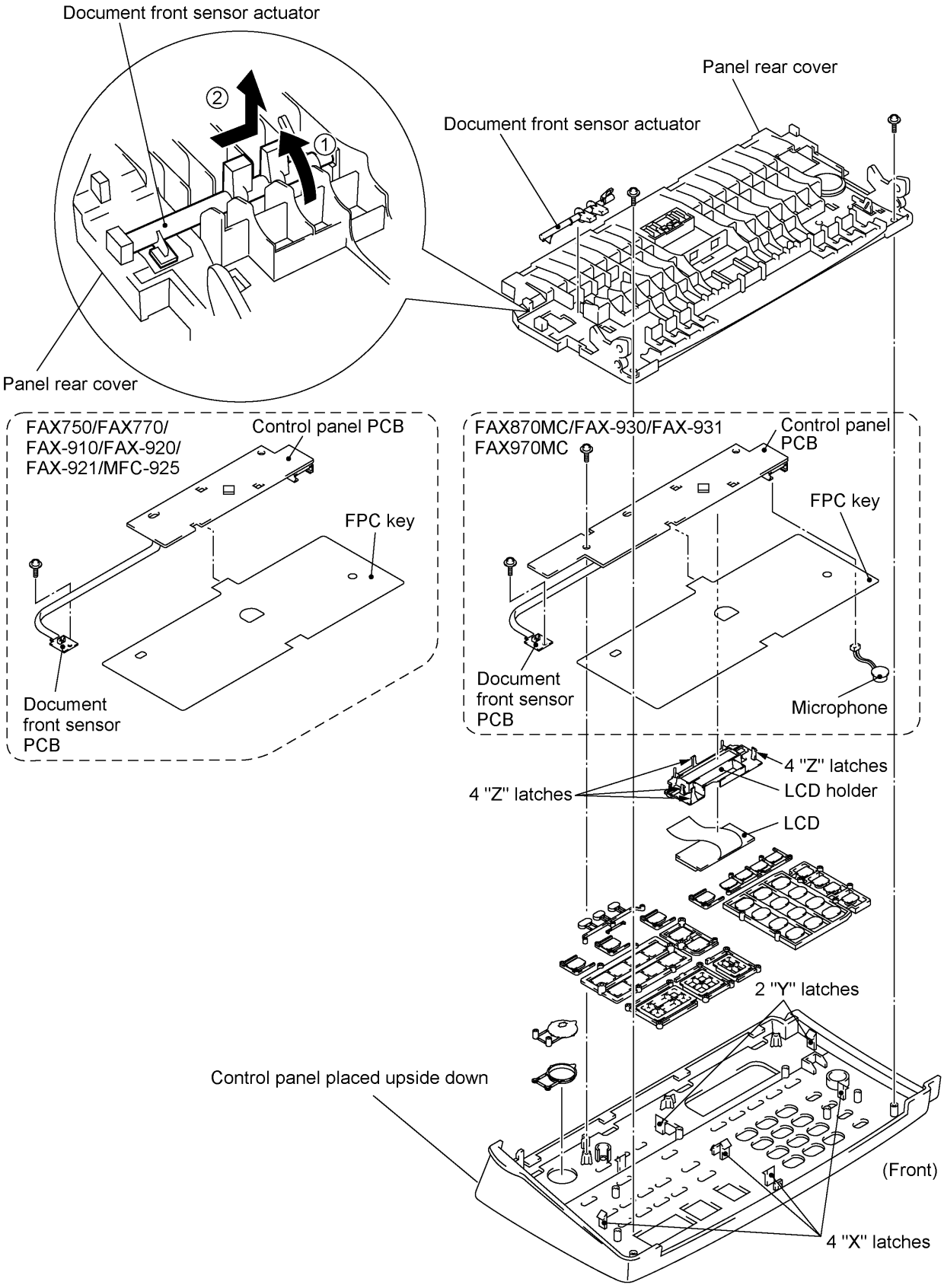
Document front sensor actuator
Panel rear cover
Document front sensor actuator
Panel rear cover
FAX750/FAX770/
FAX-910/FAX-920/
FAX-921/MFC-925
Control panel PCB
FPC key
Document
front sensor
PCB
FAX870MC/FAX-930/FAX-931
FAX970MC
Control panel
PCB
FPC key
Document
front sensor
PCB
Microphone
4 "Z" latches
LCD holder
4 "Z" latches
LCD
2 "Y" latches
Control panel placed upside down
(Front)
4 "X" latches

(11) To remove the LCD, unhook the four "Z" latches of the LCD holder from the control panel PCB. Unlock the LCD cable connector and disconnect the LCD flat cable. Slide the LCD to the cable side and remove it from the LCD holder.

NOTE: Do not take out the LCD except when the LCD is defective and requires replacement.

(12) Unlock the FPC key connector and disconnect the FPC key.

n Reassembling Notes

- A new LCD is covered with a protection sheet. Before installing it, remove the protection sheet.
- As shown below, route the LCD flat cable and set the LCD holder on the control panel PCB.

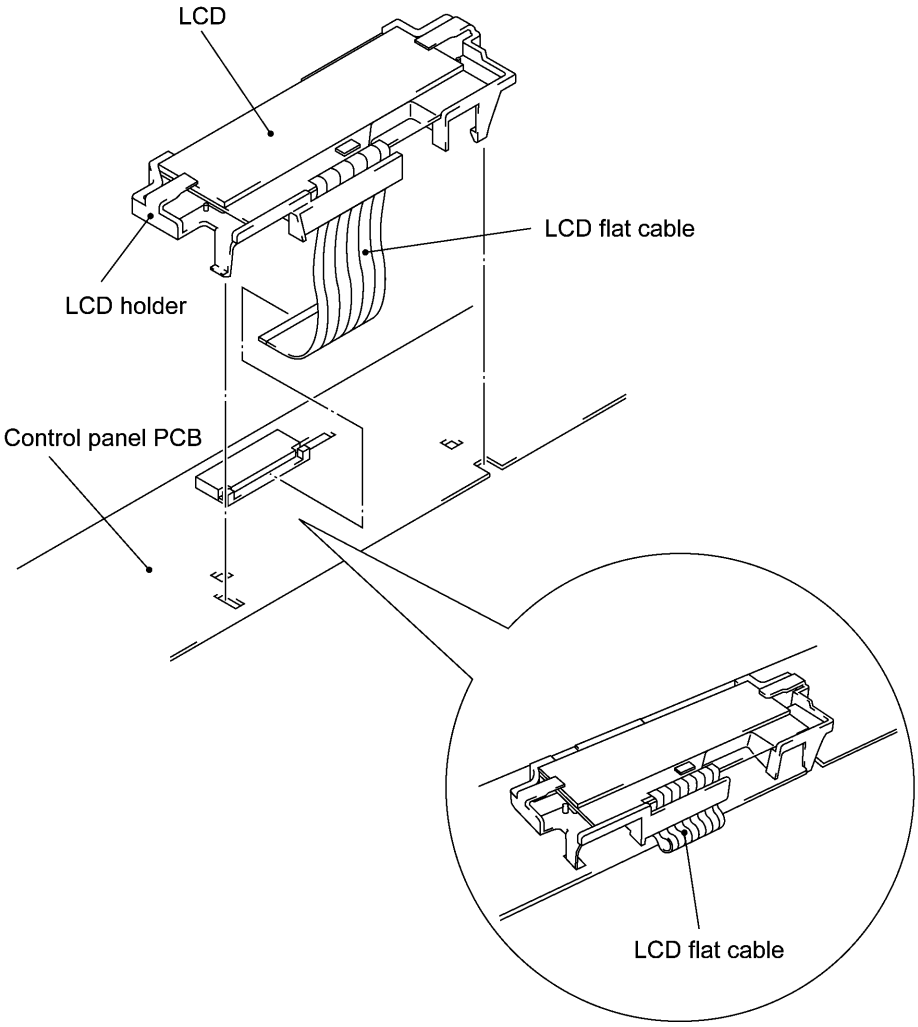

- Before reinstalling the control panel PCB to the control panel, wipe fingerprints off the LCD surface with a soft cloth.
- After assembling the document pressure bar and its support together, check that the boss of the document pressure bar is fitted in the hole provided in the support.
- After reinstalling the assembly of the document pressure bar and its support to the control panel ASSY, attach the white film, referring to the illustration given on page IV-10.

1.4 LF Roller ASSY and CIS Unit

(1) Take off the LF leaf spring by removing the screw.

(2) Push the arm rib to the rear and shift the LF roller ASSY to the left. The bearing also comes off.

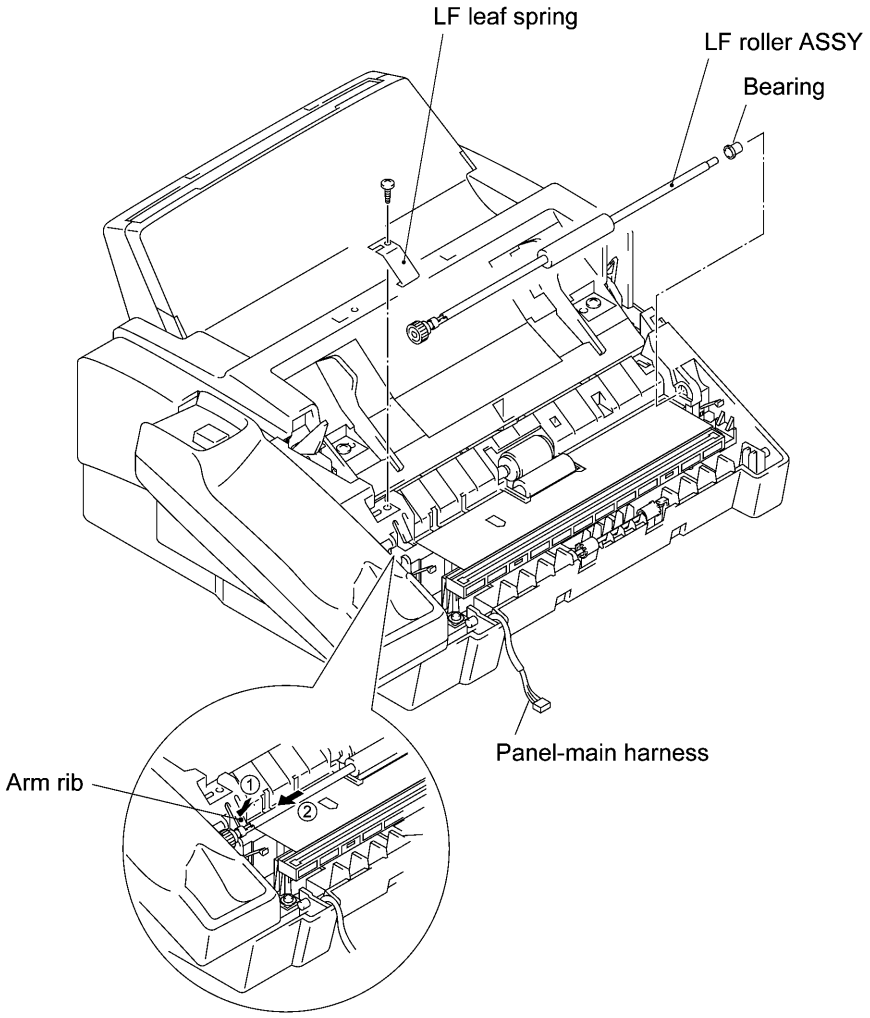

(3) Peel off the black CIS film.

NOTE: Once removed, the CIS film will become unusable and a new one will have to be put back in.

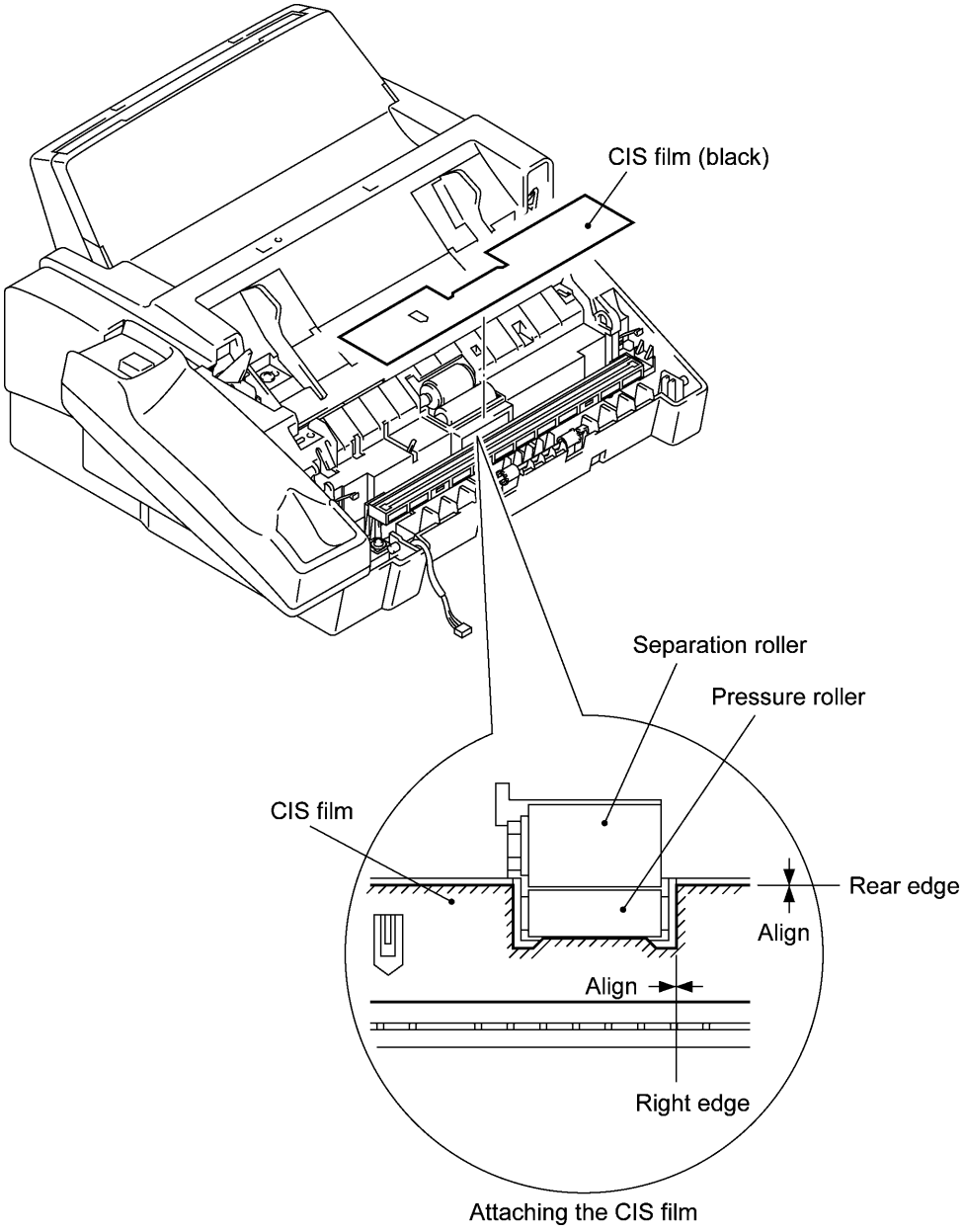

Attaching the CIS film

(4) Remove screw "a" from the CIS holder L.

(5) Lift up the left end of the CIS unit slightly and disengage the CIS holder R from the hooks provided of the main frame.

(6) Disconnect the CIS-main harness.

(7) Take off the CIS holders L and R by removing screws "b."

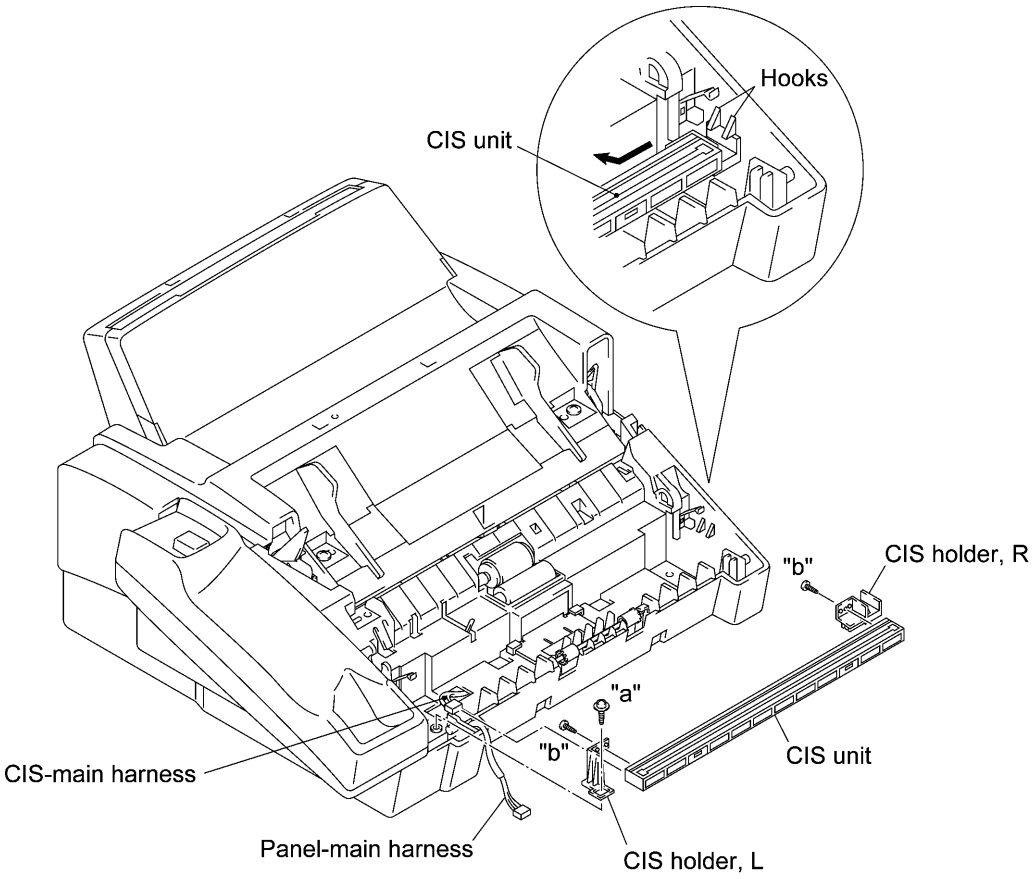

(8) Push the latch to the rear and remove the document pressure rollers and their shaft.

(9) Remove the document pressure roller spring.

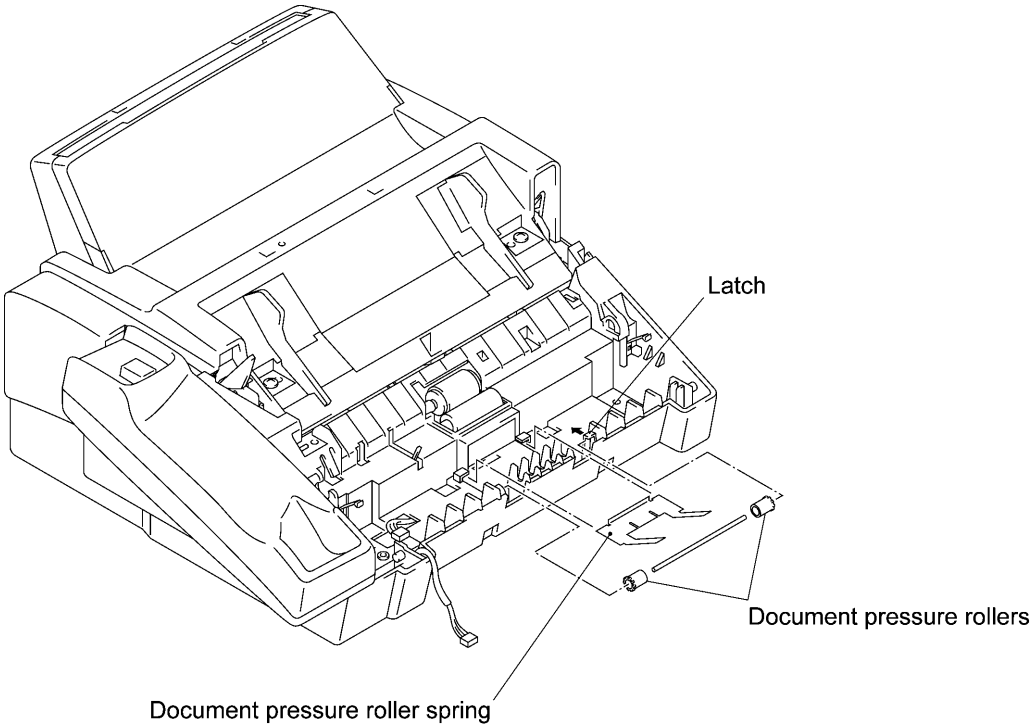

n Reassembling Notes

- When attaching the CIS film, align its right and rear edges with the cutout provided in the main frame, as illustrated on page IV-15.
- Before reinstalling the LF roller ASSY, apply grease to the left end of the ASSY. (Refer to Section 2, "LUBRICATION.")

1.5 Head Protector, Recording Head ASSY, Head Adjuster, and Recorder Frame

(1) Pull up the lock levers and open the recording paper cover ASSY to the rear.

(2) While pulling up the left end of the head protector, unhook latches • through „ in this order with a small flat screwdriver as illustrated below.

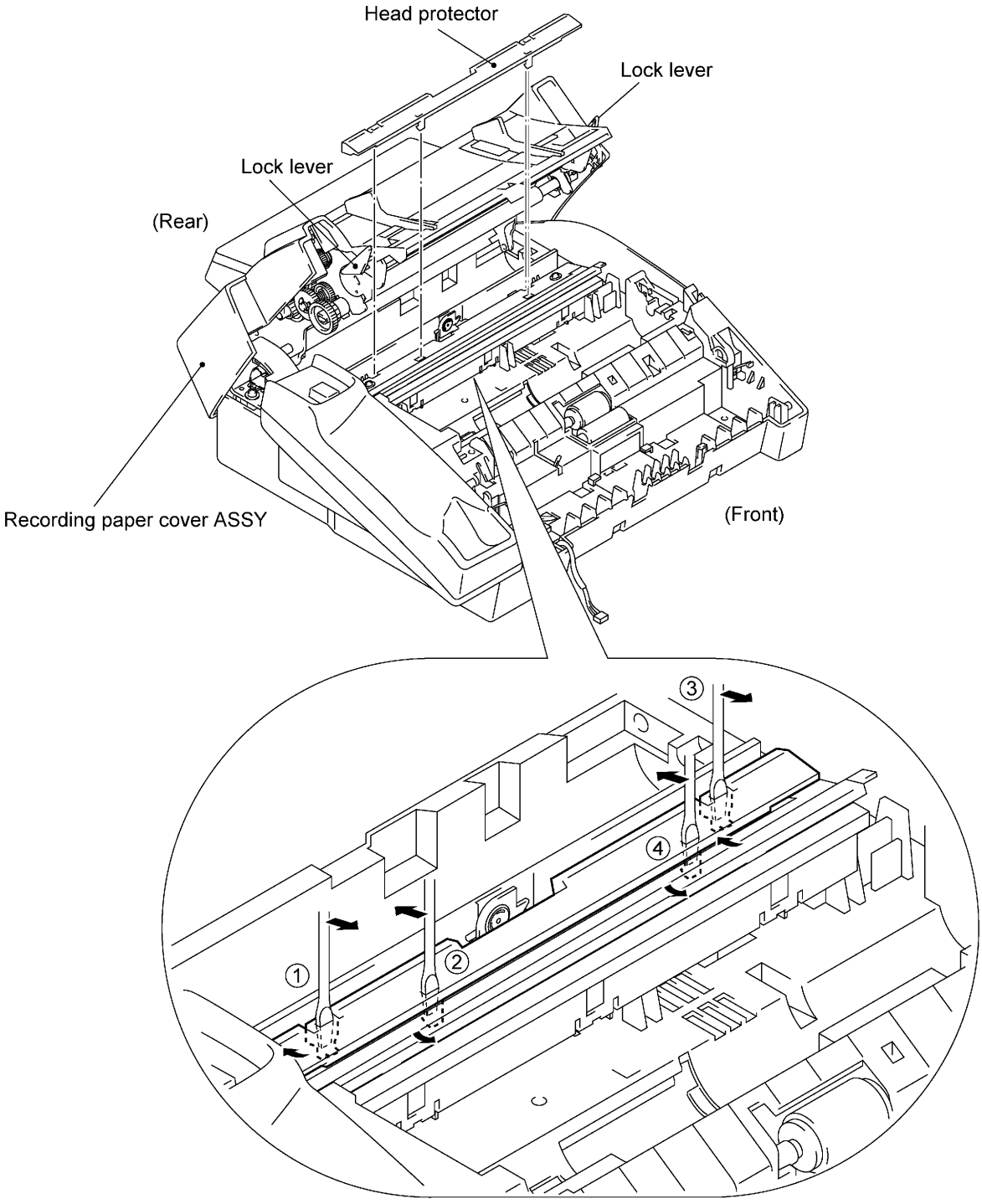

Unhooking the latches of the head protector

(3) Push down both ends of the recording head ASSY and move it to the rear to release the tabs from the cutouts provided in the recorder frame.

(4) Disconnect the two harnesses (main-head harness and head-power harness) from the recording head ASSY and then lift up the ASSY.

(5) Remove the three head springs.

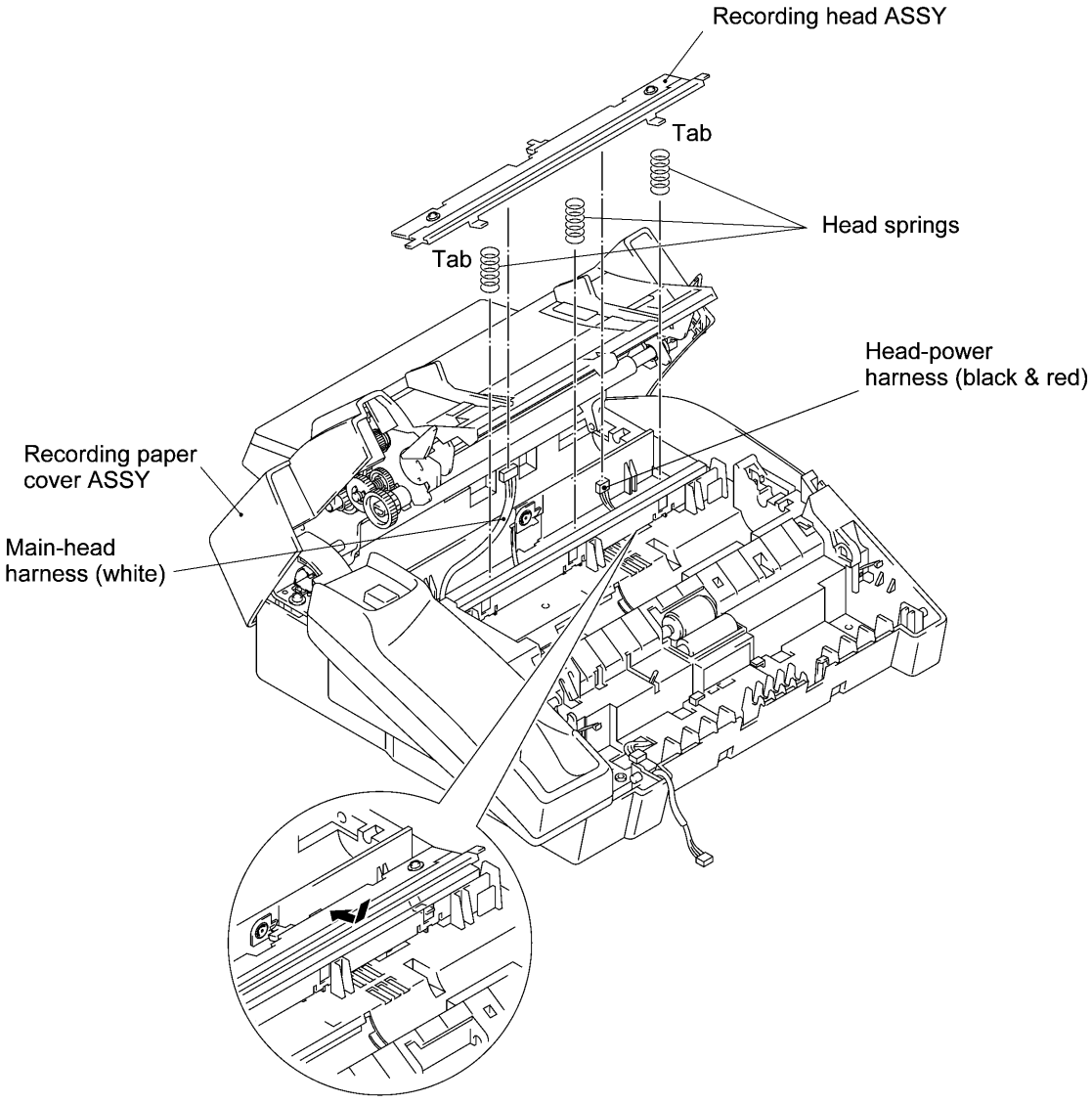

Installing the recording head ASSY

(6) Take off the recorder frame by removing the two screws.

(7) Remove the grounding spring.

(8) Take out the head-power harness from the hook provided on the main frame.

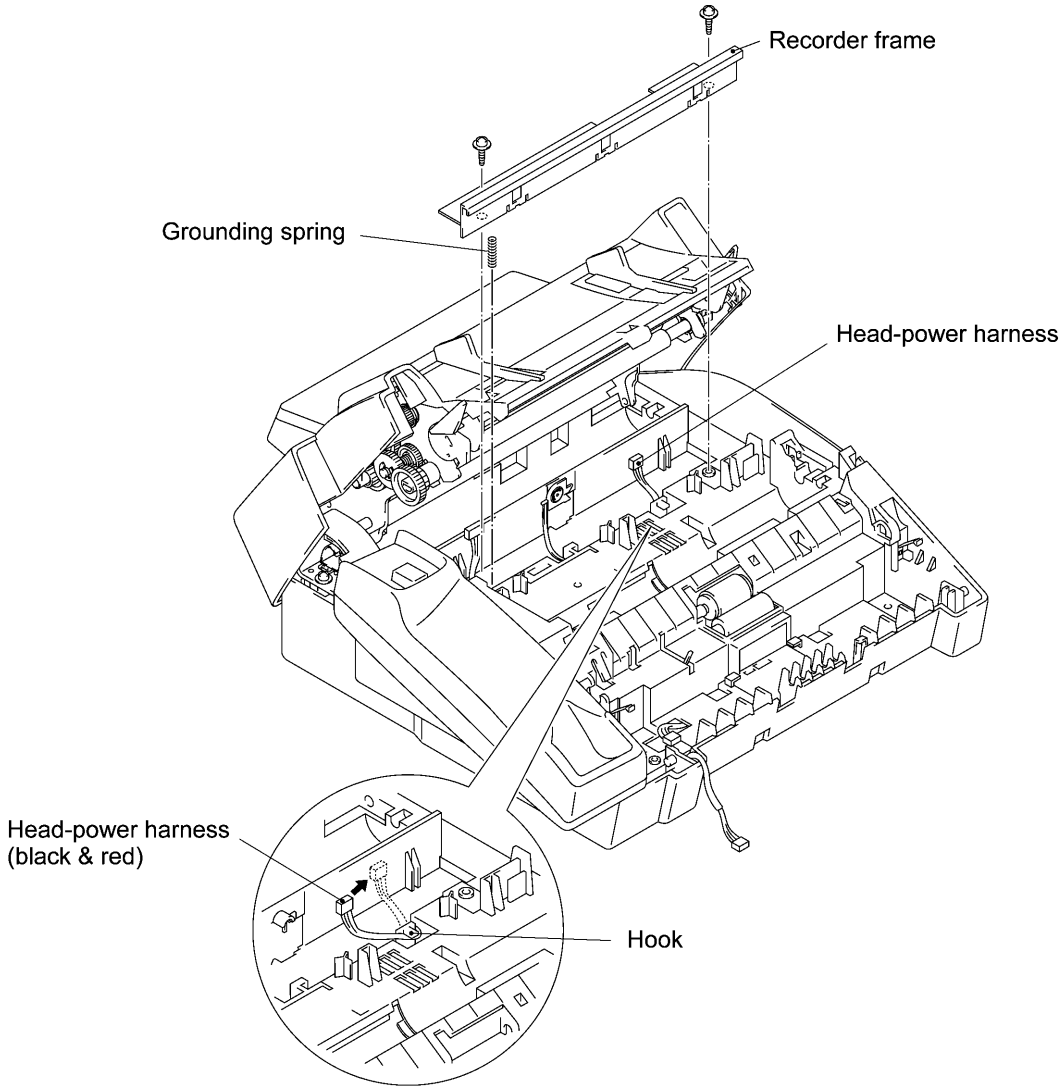

(9) To replace the main frame with a new one, first check to see which position the head adjuster is currently set in (see the three positions in the illustration below), and then remove the head adjuster with a flat screwdriver. Next set it to the new main frame in the same position.

If the printed image is abnormally light or dark, remove the head adjuster and set it back in any other position.

NOTE: Do not access the head adjuster unless necessary.

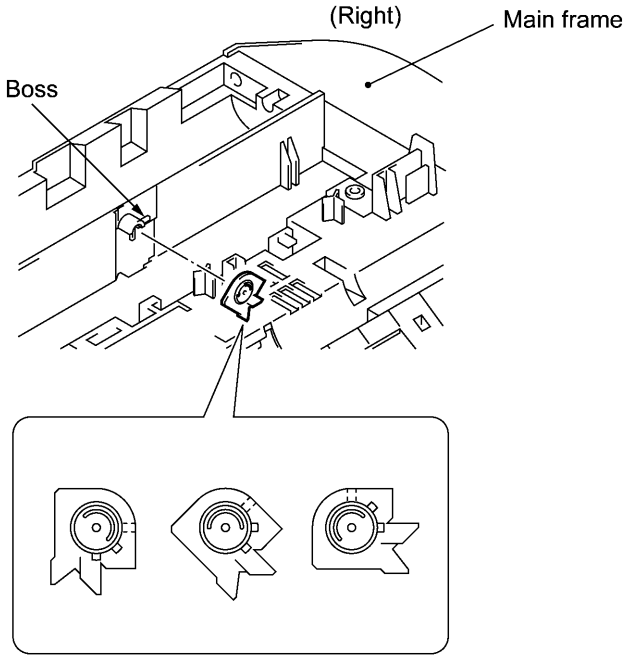

Three positions of head adjuster

n Reassembling Notes

- Before reinstalling the recorder frame, check its top end (on which paper and ribbon pass) for scratches or burrs. Those on the top end will affect the printed image.
- When reinstalling the recording head ASSY, make sure that the three head springs are set into place.

1.6 Recording Paper Cover ASSY and Paper Guides*

(*Not provided on the U.S.A. and Canadian versions.)

(1) To remove the paper guides*, open the paper front cover towards you, then pull up the latch (in the direction of arrow • in the illustration below) and pull the paper guide in the direction of arrow ❟ .

(2) Remove the two screws.

(3) Lift up the front of the recording paper cover ASSY and take it out to the rear.

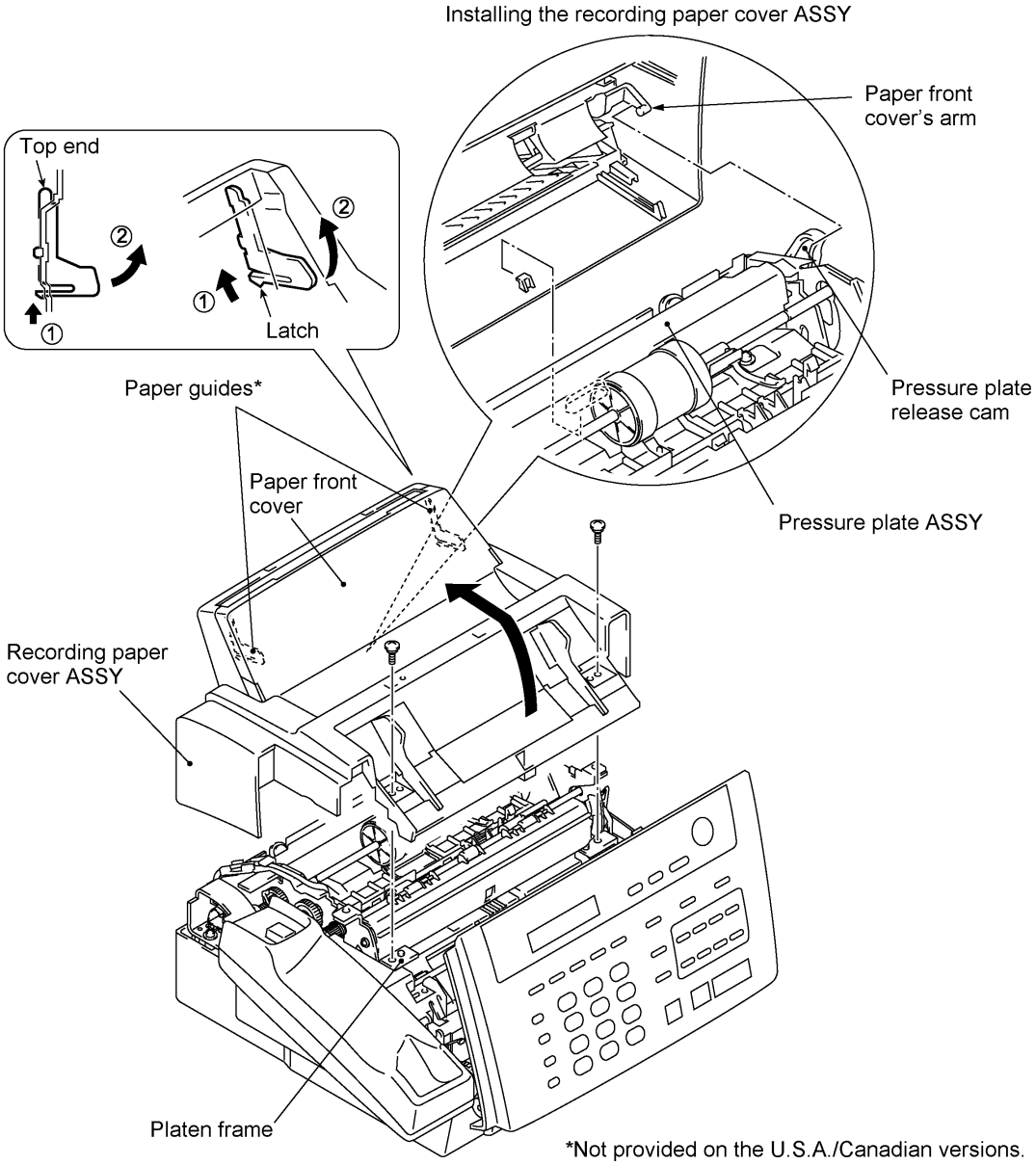

n Reassembling Notes

- To reinstall the paper guides*, first insert its top end and then push the guide into place.
- When reinstalling the recording paper cover ASSY, slightly slant it to the right and hook the paper front cover's arm onto the pressure plate release cam as shown above while keeping the paper front cover closed, then put the ASSY onto the platen frame.

  After installation, open and close the paper front cover to check that the paper front cover is interlocked with the pressure plate ASSY.

1.7 Lock Levers, Chute B ASSY, Gears, Paper Ejection Roller, Paper Feed Roller ASSY, Pressure Plate, Paper Feed Chute and Other Components on the Platen Frame

With the platen frame being secured to the main frame, you can remove and install the components given in this section. To remove the platen frame itself, see Section 1.8.

(1) Open the platen frame ASSY.

(2) Turn the lock levers R and L to the rear and pull them out.

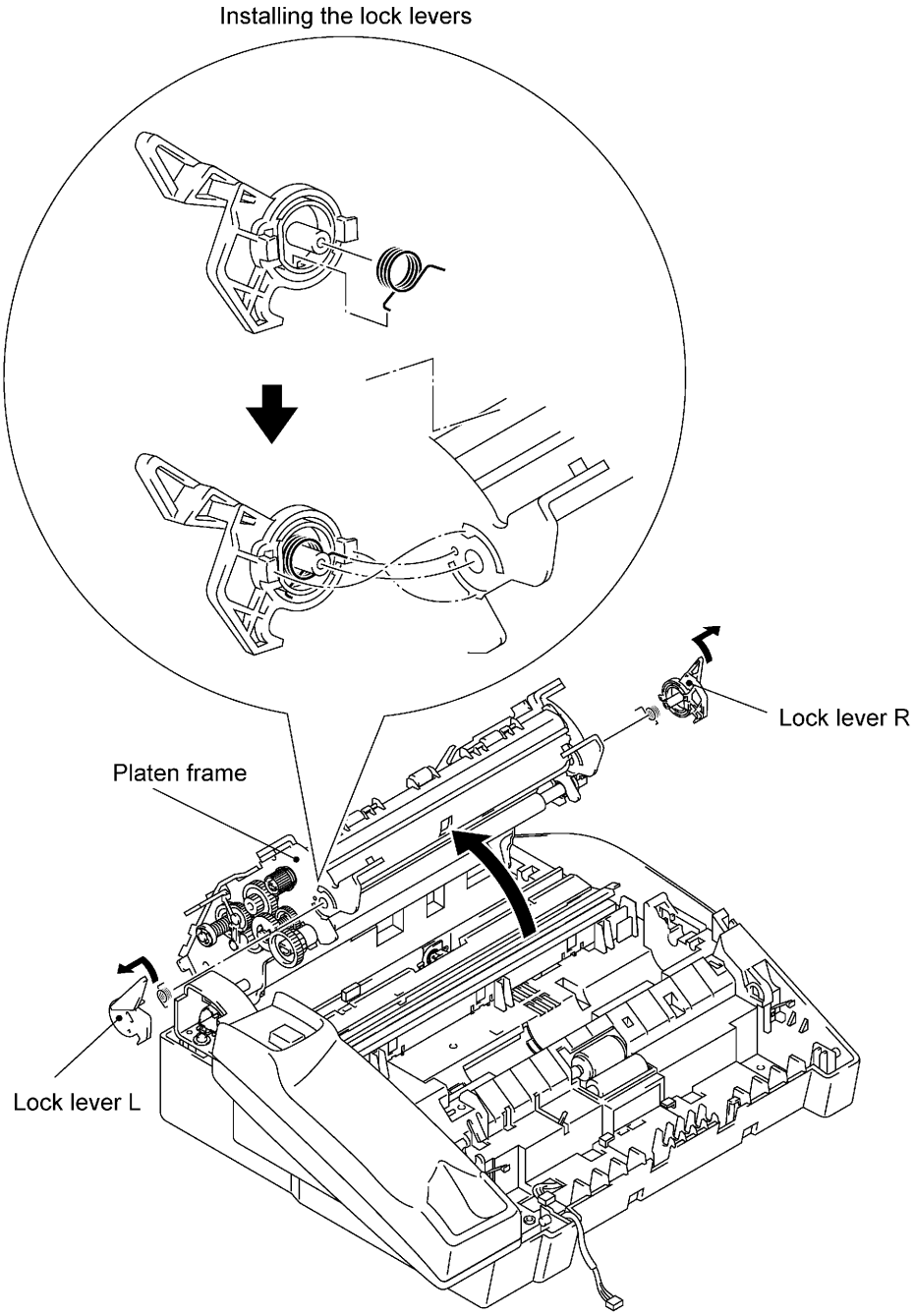

(3) Pull the chute B ASSY up and towards you to unhook the upper latches from the platen frame, then pull the ASSY down and towards you to unhook the lower latches.

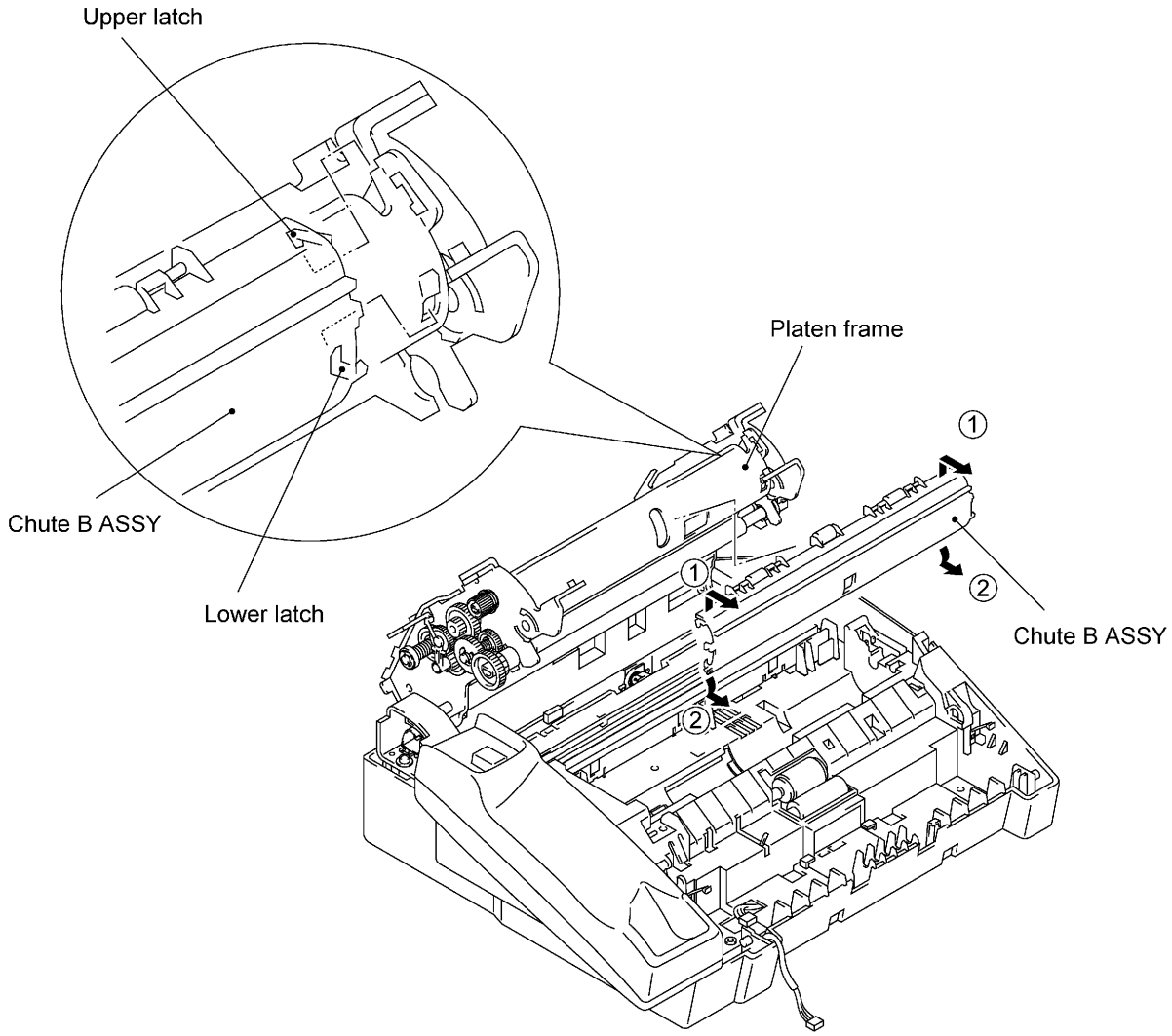

(4) At the left end of the platen frame, remove the gears in the following order:

- Platen gear (gear 25/27) by pulling its pawl outwards. (Also remove the black platen shaft bushing L.)
- Arm P ASSY by pulling its pawl outwards.
- Gear 24/28 (sun gear)
- Clutch gear 37 ASSY by removing the retaining ring, together with gear 19/38
- Paper ejection roller gear

  NOTE: The platen shaft bushing is greased for antistatic purpose. Take care not to stain other parts with the grease.

(5) Remove the paper ejection roller.

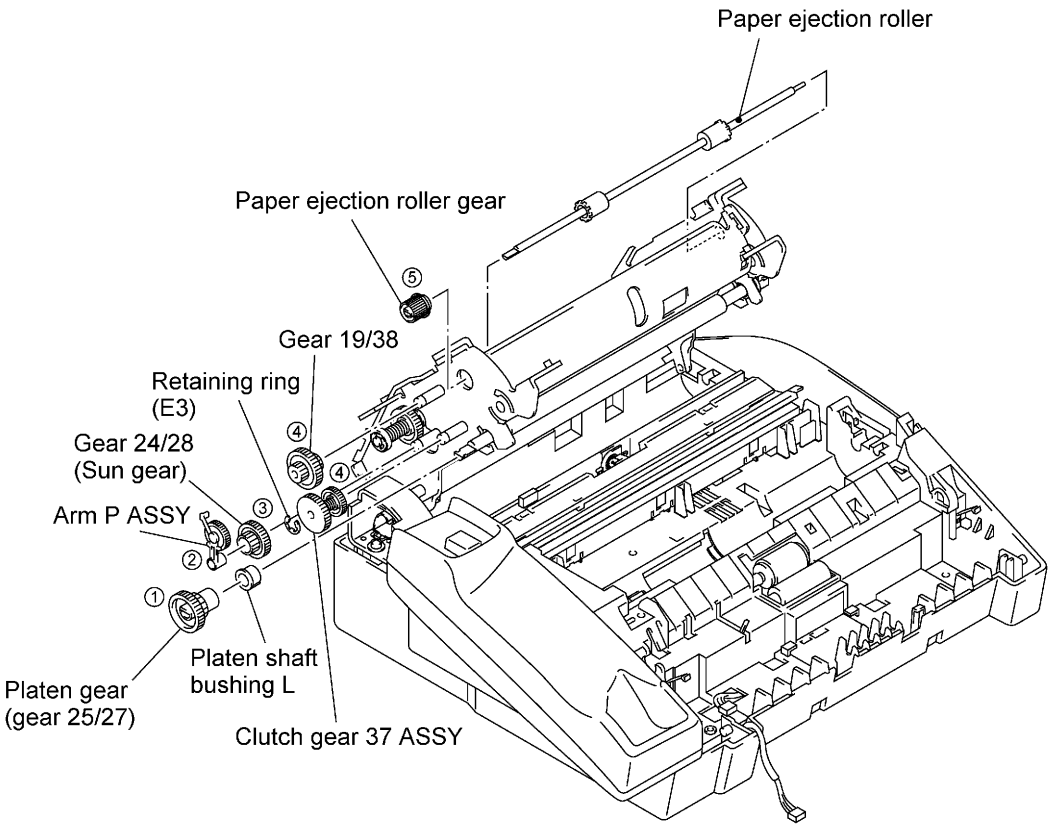

(6) Remove the front cover sensing actuator from the paper feed roller shaft by pulling up the actuator's rear edge as shown below.

(7) At the right end of the paper feed roller ASSY (when viewed from the rear), remove the collar stopper and gear 43 ASSY by removing the retaining ring.

(8) At the left end (when viewed from the rear), remove the pawled bushing by pulling its pawls outwards.

Next, pull the paper feed roller shaft to the right until the left end of the shaft comes out of the platen frame and then tilt the shaft to the right so that the bushing-fixed end can pass through the lower hole, and take it out to the left.

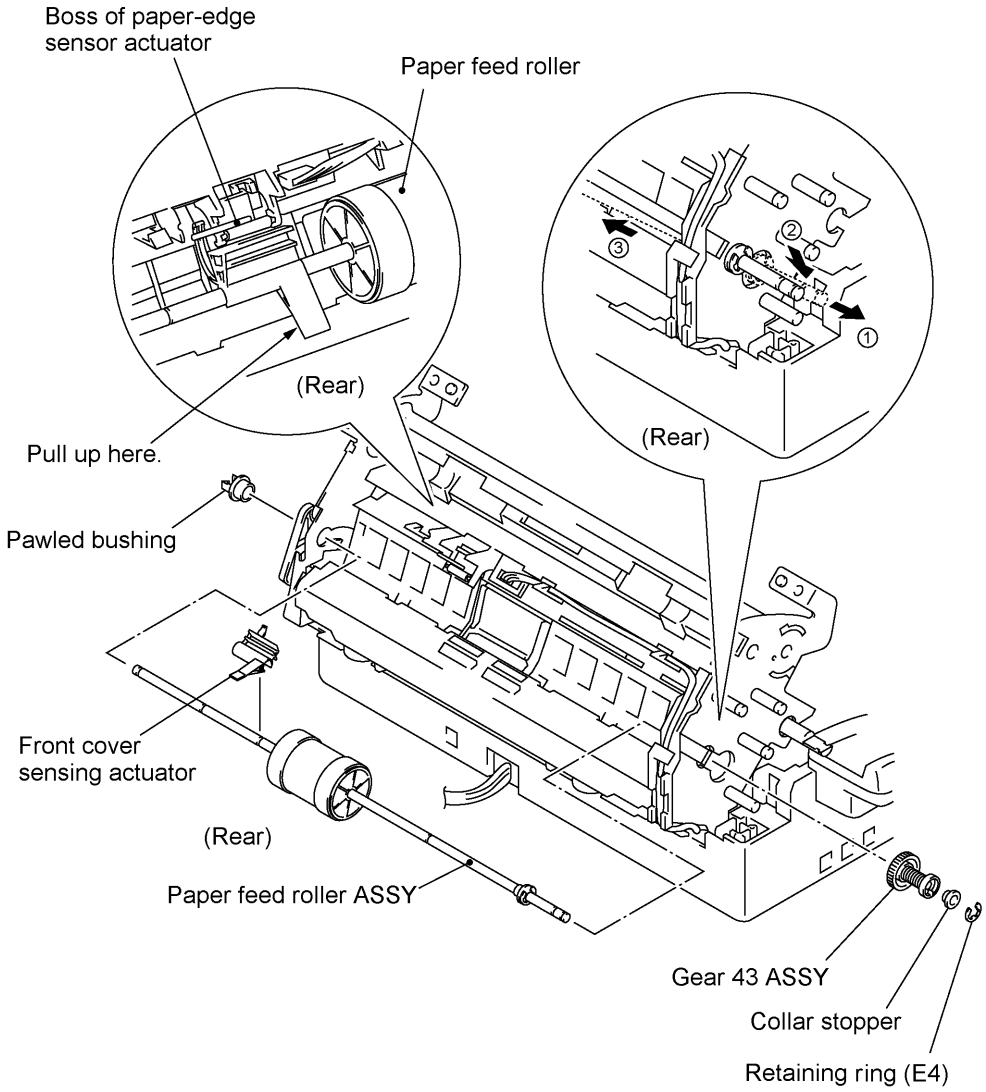

(9) Make sure that the platen is set in place, and then close the platen frame ASSY.

NOTE: If you close the platen frame ASSY when no platen is set and the recording head ASSY is installed, the platen frame ASSY and the recording head ASSY will be locked together.

(10) Fully turn the pressure plate release cam to the rear and pull it up and outwards to unhook from the platen frame.

(11) Pull the latches provided on the pressure plate outwards and lift it up. The two springs also come off.

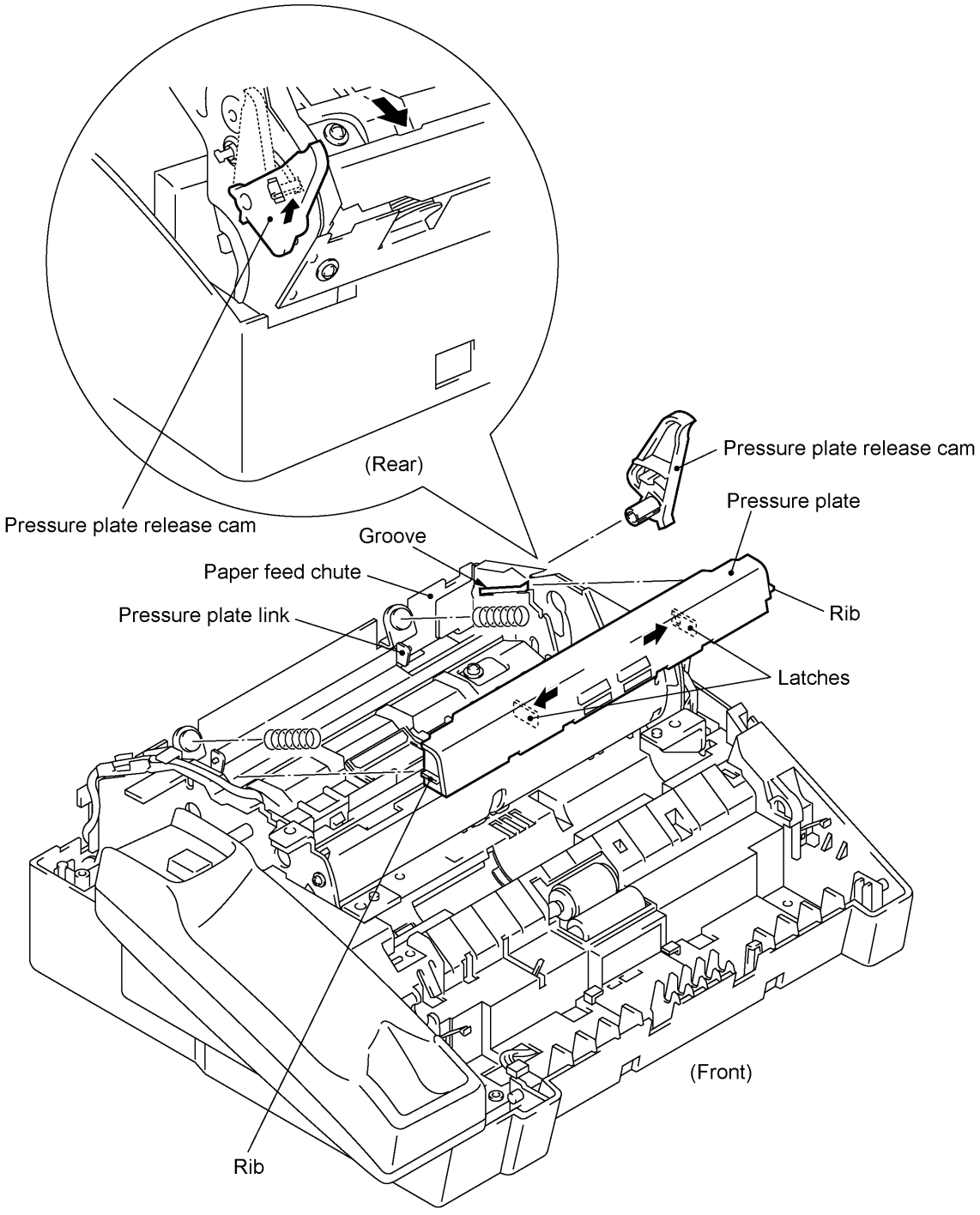

(12) Pull up the separation pad while squeezing it. The spring also comes off.

(13) Remove the paper-edge sensor actuator by pulling the support outwards.

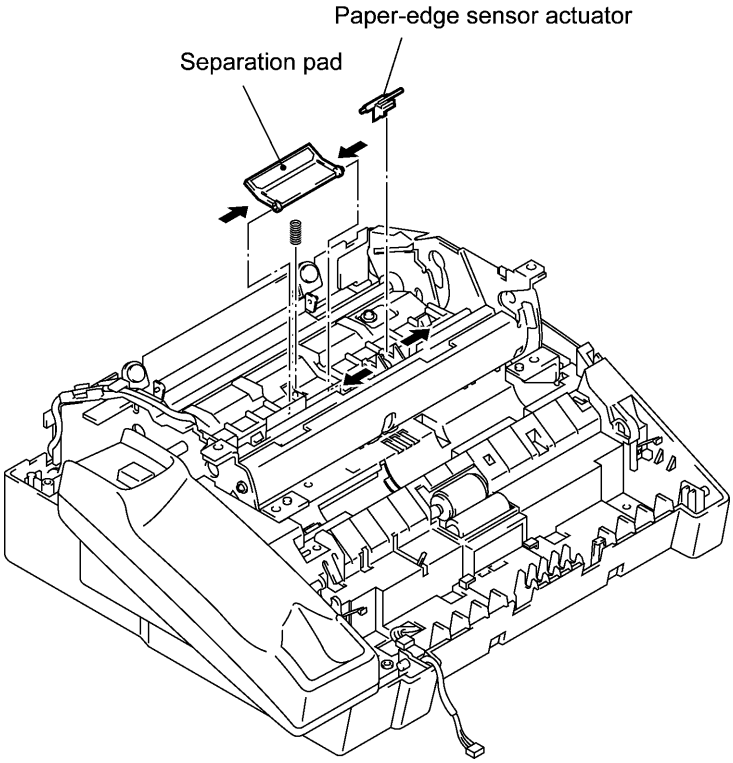

(14) To take the paper feed chute off the platen frame, do the following:

- Disconnect the main-sensor harness from the sensor PCB while pressing down the PCB with your finger, then remove the harness guide and take out the harness from the cable clamps.

  NOTE: Pulling up the main-sensor harness without pressing down the sensor PCB will cause the PCB to work out of the paper feed chute.

  NOTE: Once removed, the harness guide will become unusable and a new one will have to be put back in.

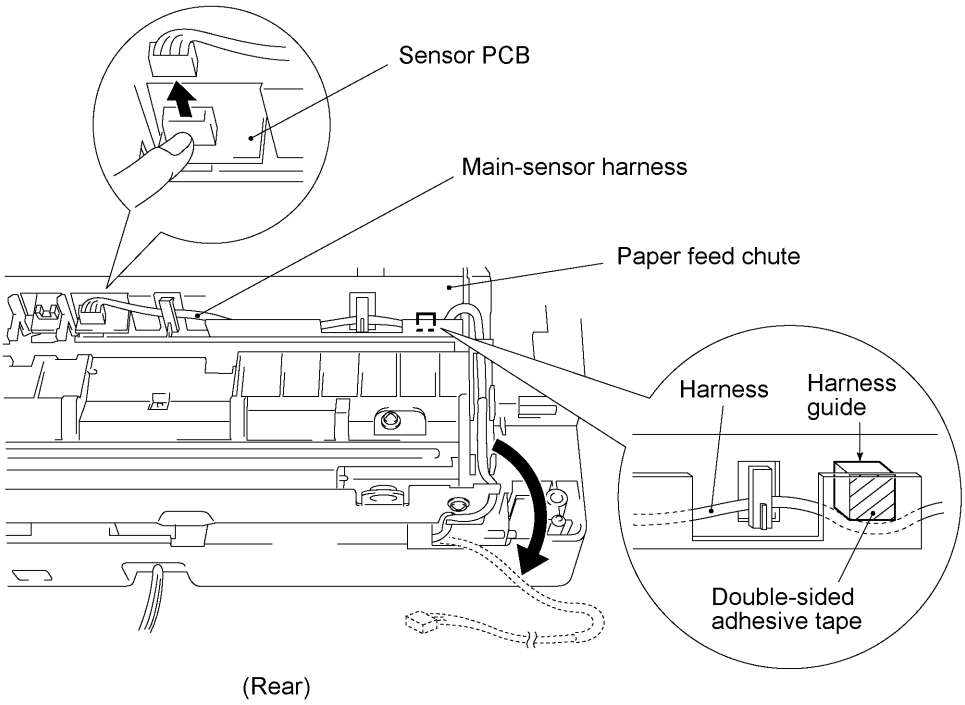

- Remove the two screws and lift up the paper feed chute.

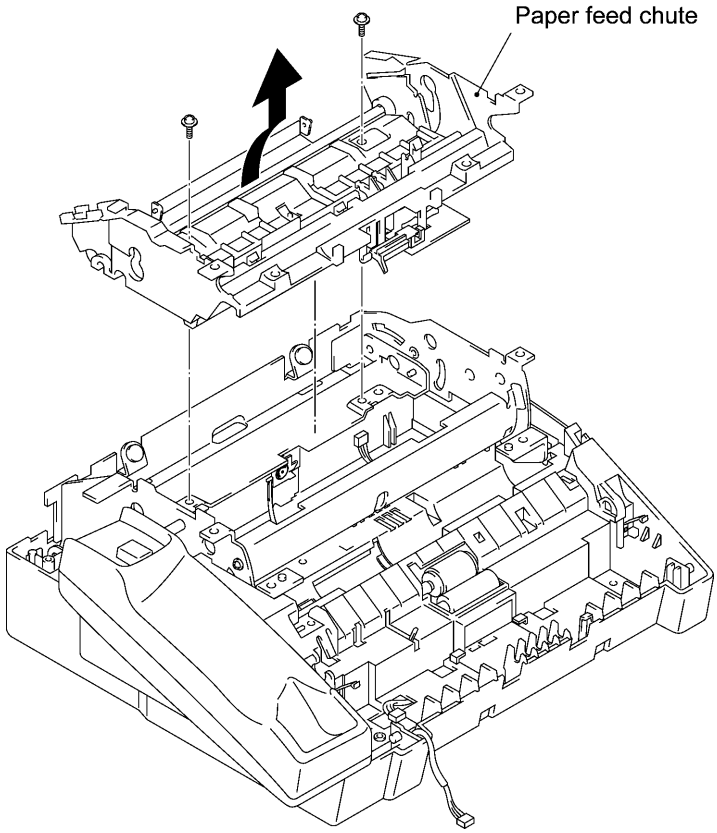

(15) From the paper feed chute, remove the pressure plate link, paper ejection sensor actuator, sensor PCB, and chute film.

NOTE: Once removed, the chute film will become unusable and a new one will have to be put back in.

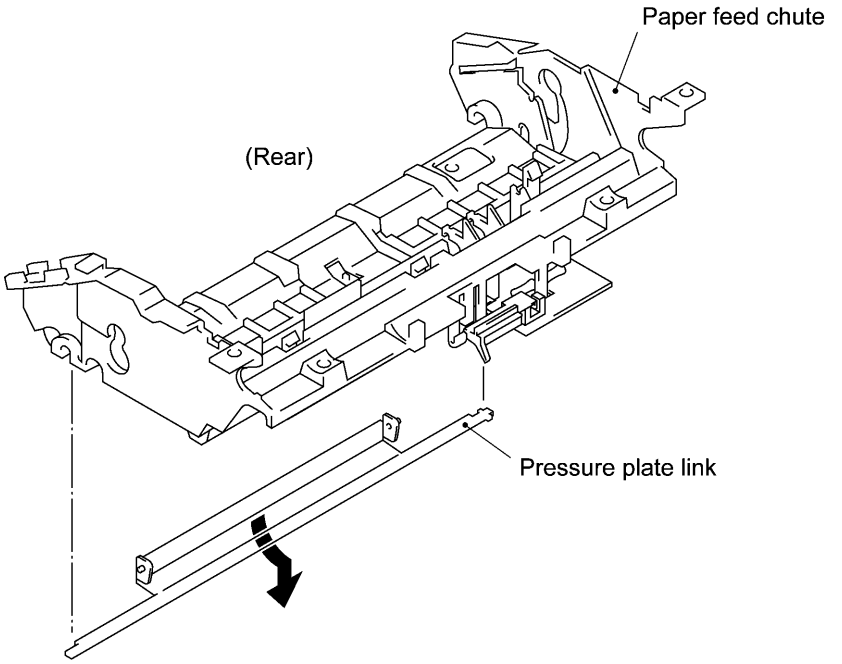

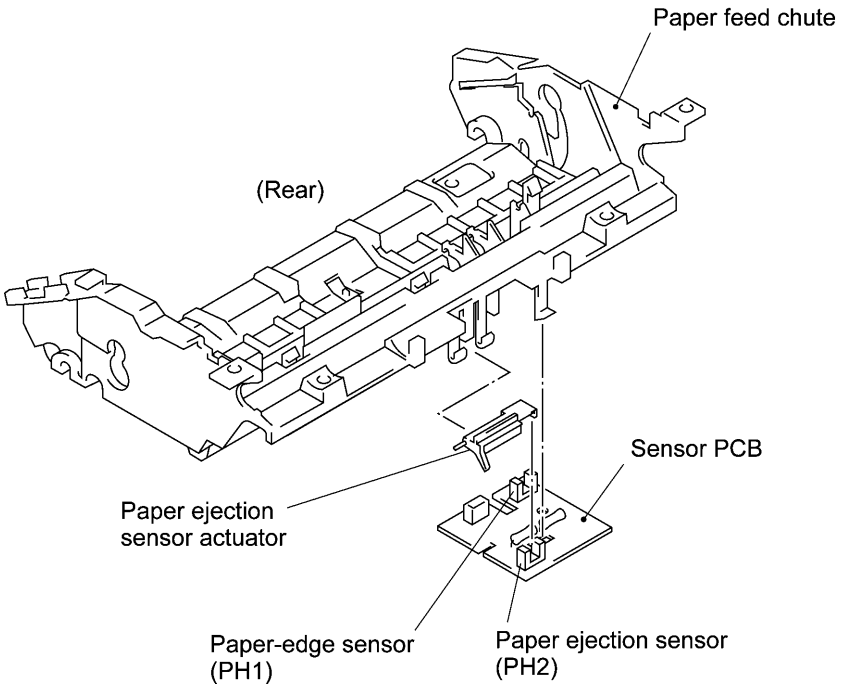

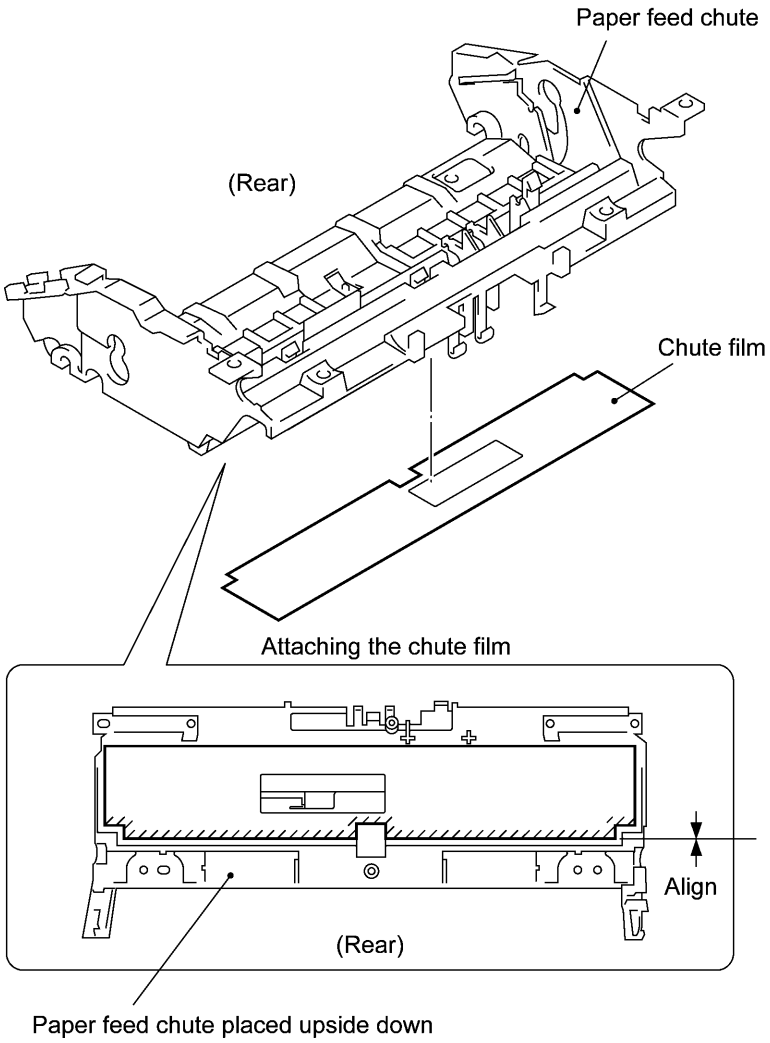
Paper feed chute
(Rear)
Chute film
Attaching the chute film
Align
(Rear)
Paper feed chute placed upside down

(16) Remove the platen as follows:

At the left end of the platen frame, remove the platen gear (gear 25/27) by pulling its pawl outwards and then remove the platen shaft bushing L.

At the right end, remove the platen shaft bushing R by pulling its pawls outwards.

Move the platen to the left to take out the right end from the platen frame and then take it out to the right.

CAUTION: After removing the platen, NEVER close the platen frame ASSY when the recording head ASSY is set in place. Doing so will make the cutouts of the platen frame ASSY catch the right and left ends of the recording head ASSY. The platen frame ASSY and the recording head ASSY will be locked together.

NOTE: The platen shaft bushings are greased for antistatic purpose. Take care not to stain other parts with the grease.

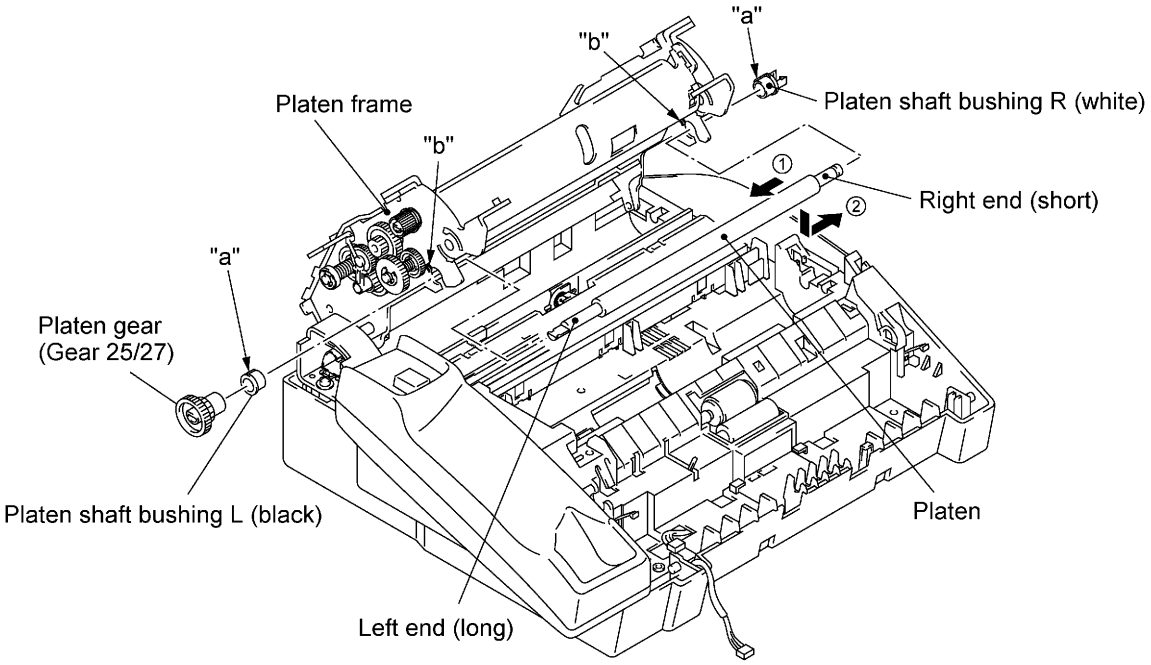

n Reassembling Notes

- If you replace the platen shaft bushing(s) with new one(s), apply grease to it. (Refer to Section 2, "LUBRICATION."
- When reinstalling the platen shaft bushings R and L, fit boss "a" of each bushing into cutout "b" provided in the platen frame. (See the above illustration.)
- When attaching the chute film, align its rear edge with the rib of the paper feed chute.
- When reinstalling the pressure plate, slide the ribs along the grooves of the paper feed chute until the latches of the pressure plate catch the pressure plate link.
- When setting the lock levers back into place, as shown on page IV-23, first fit the shorter end of the spring into the cutout provided in each lock lever, then fit the longer end of the spring and the lock lever's boss into the small and large holes provided in the platen frame, respectively. Fully turn the lever to the rear so that the lever's hooks catch the platen frame.

1.8 Cover Stopper and Platen Frame ASSY

TIP: Only when you need to remove the platen frame from the main frame, remove the cover stopper. When accessing other components, keep the cover stopper in place for easier handling.

(1) Remove the screw from the cover stopper.

(2) Lift up the rear end of the cover stopper and open the platen frame ASSY to remove the cover stopper.

(3) Take out the cover stopper spring plate.

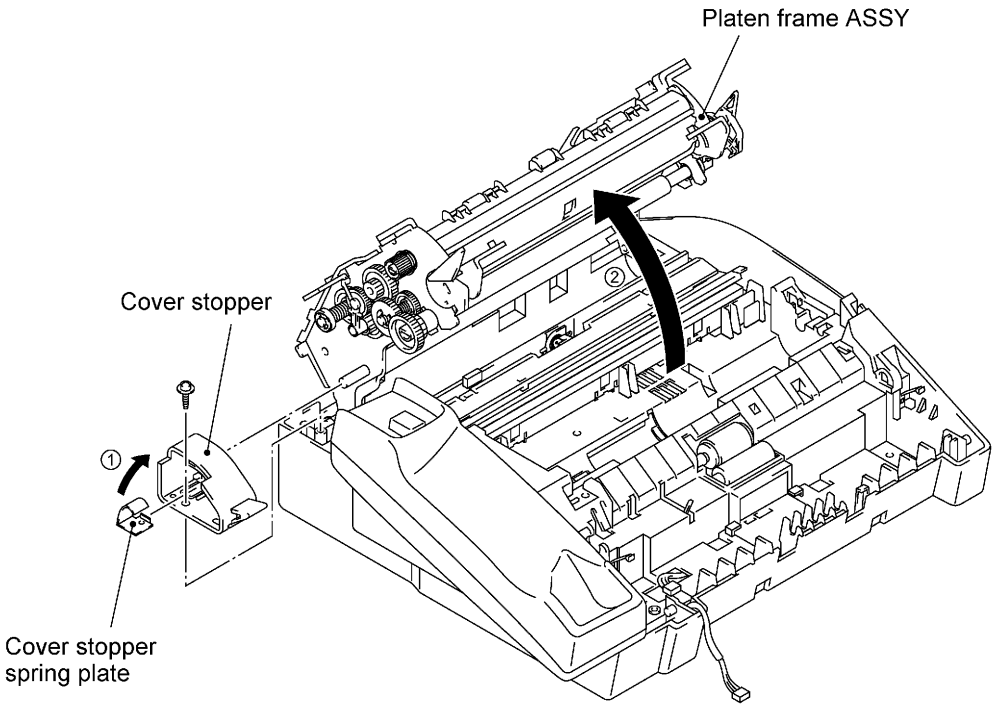

(4) Remove the retaining ring (E5) from the left end of the platen frame and move the frame to the left. The spring washer also comes off.

NOTE: Take care not to drop the retaining ring inside the main frame. If you drop it, you need to remove the bottom plate to take it out.

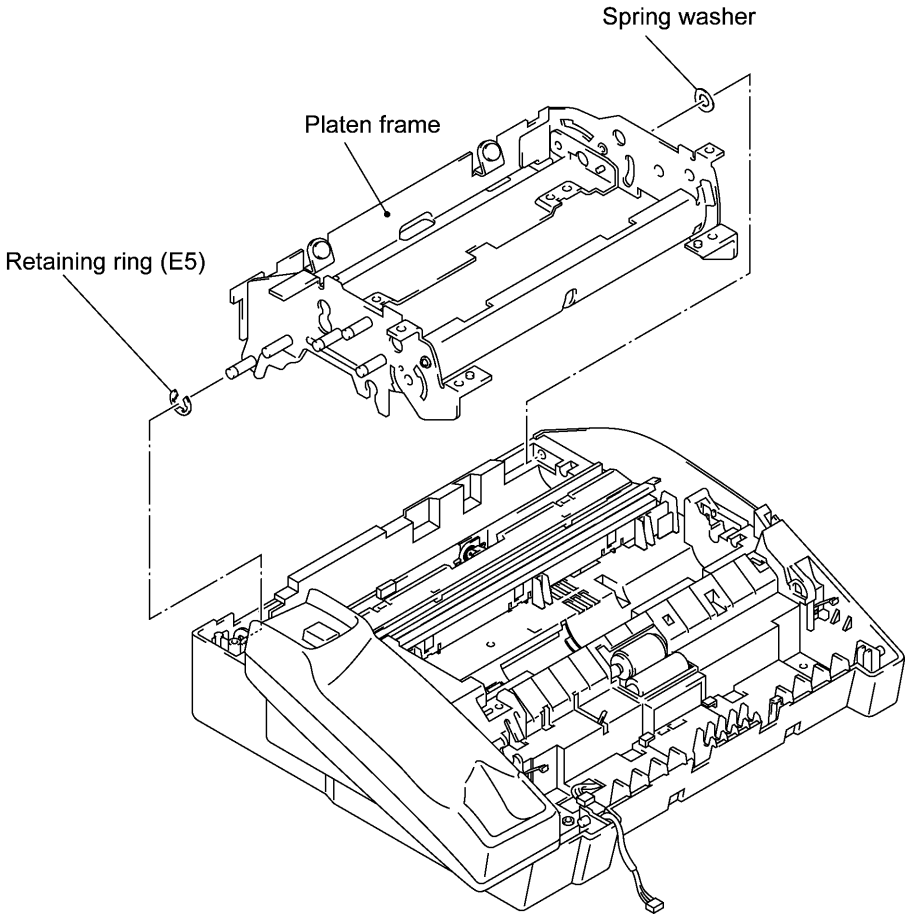

1.9 Bottom Plate

(1) Place the machine upside down.

(2) Remove the seven screws from the bottom plate.

(3) Slightly lift up the bottom plate and disconnect the grounding terminal.

(4) Remove the bottom plate together with the insulation sheet.

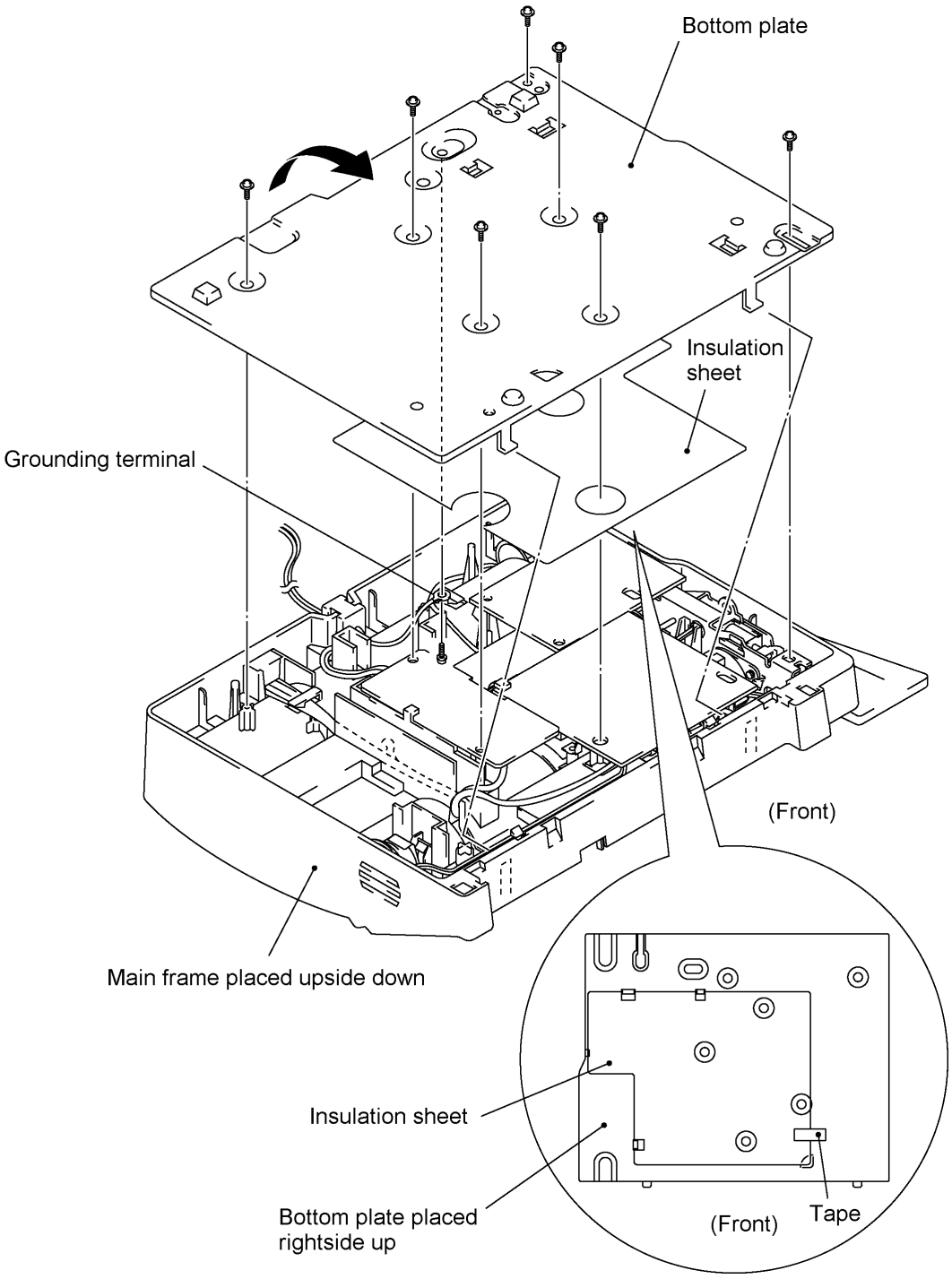

1.10 Power Supply PCB, Main PCB, and NCU PCB

(1) Unhook the head-power harness from latch "B" (together with the PC I/F modular harness since the head-power harness is routed under the PC I/F modular harness through the duct when viewed from the bottom).

(2) Pull out the AC cord bushing from the main frame.

(3) Disconnect the power supply PCB from the main PCB.

(4) Slightly lift up the power supply PCB and disconnect the head-power harness.

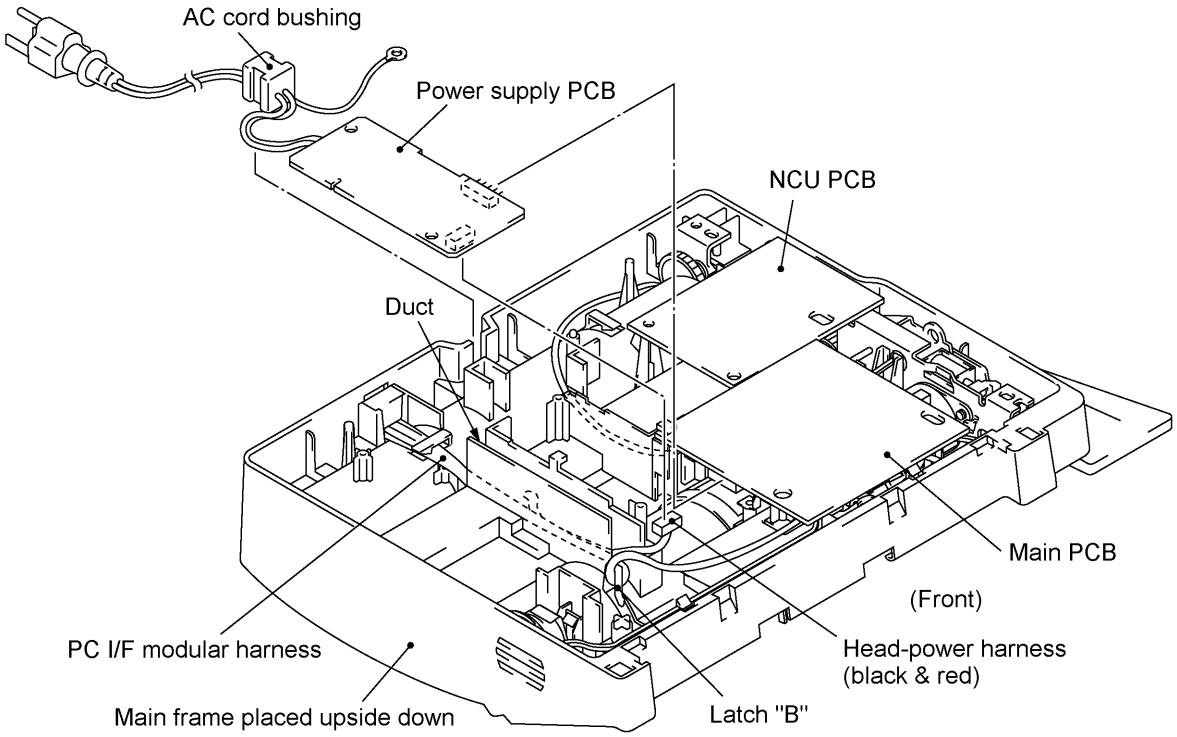

(5) Slightly lift up the main PCB and NCU PCB together, then disconnect the NCU PCB from the main PCB.

(6) Disconnect the following nine harnesses from the main PCB:

- Hook switch harness (Not provided on the FAX-910.)
- Speaker harness
- Panel-main harness
- PC I/F modular harness
- CIS harness
- Solenoid harness
- Motor harness
- Main-head harness
- Main-sensor harness

NOTE: The FAX870MC/FAX-930/FAX-931/MFC970MC has a Ni-MH battery ASSY. Only when you need to replace the main PCB, disconnect the battery harness. After installing a new main PCB, you may need to make settings to be stored in the RAM. If you need to replace the battery ASSY, do not disconnect the harness in this disassembly step. Doing so with the power cord unplugged will lose the settings stored in the RAM. Refer to Section 1.1.

(7) You may take out the harnesses (except for the main-head harness that is routed under the drive unit) from the main frame.

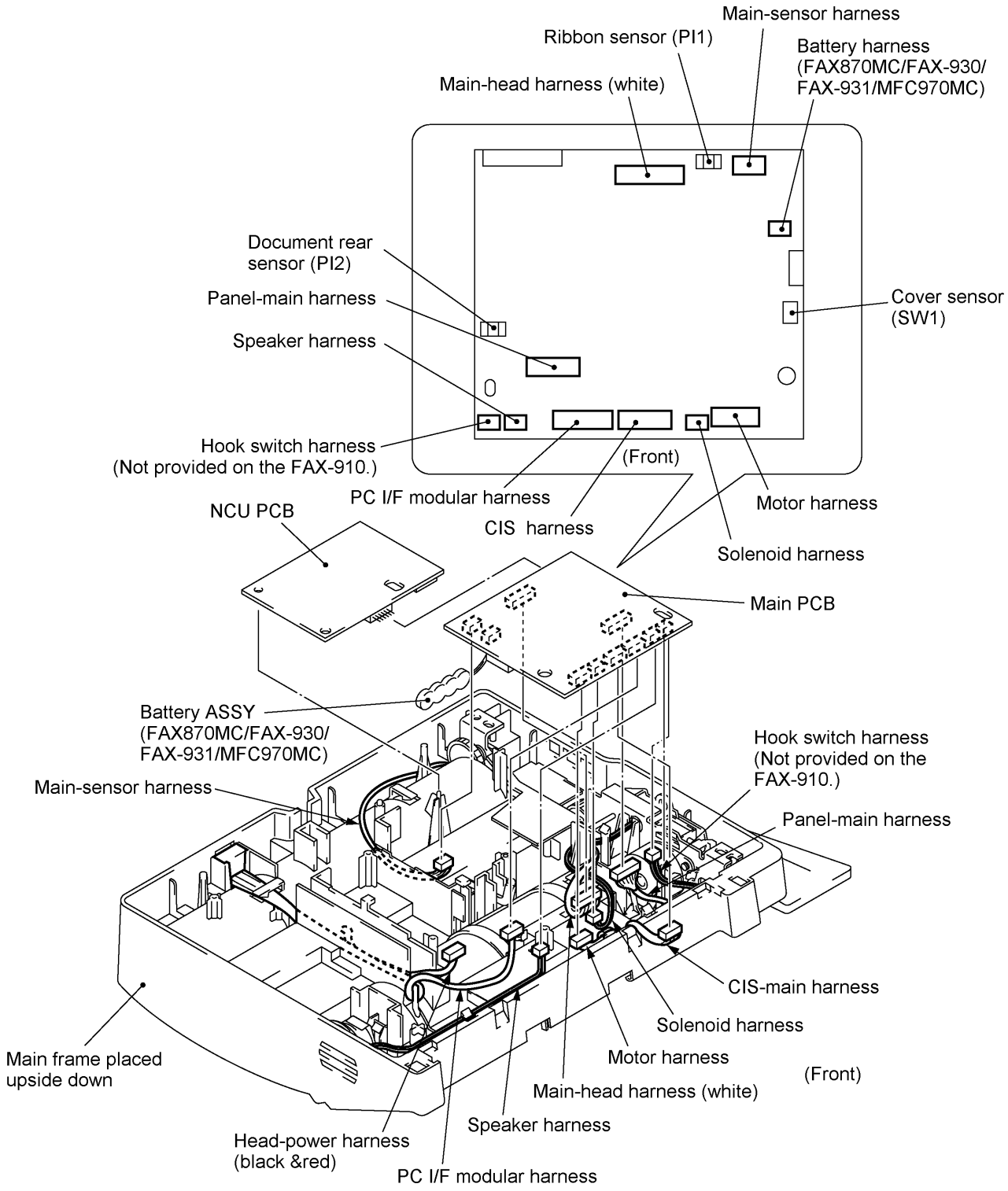
Main-sensor harness
Ribbon sensor (PI1)
Battery harness
(FAX870MC/FAX-930/
FAX-931/MFC970MC)
Main-head harness (white)
Document rear
sensor (PI2)
Panel-main harness
Speaker harness
Cover sensor
(SW1)
Hook switch harness
(Not provided on the FAX-910.)
(Front)
PC I/F modular harness
CIS harness
Motor harness
Solenoid harness
NCU PCB
Main PCB
Battery ASSY
(FAX870MC/FAX-930/
FAX-931/MFC970MC)
Hook switch harness
(Not provided on the
FAX-910.)
Main-sensor harness
Panel-main harness
CIS-main harness
Solenoid harness
Motor harness
(Front)
Main-head harness (white)
Main frame placed
upside down
Speaker harness
Head-power harness
(black &red)
PC I/F modular harness

n Reassembling Notes

- When routing the harnesses, refer to Section 1.17.
- After you replace the main PCB, be sure to follow the flowchart given below.

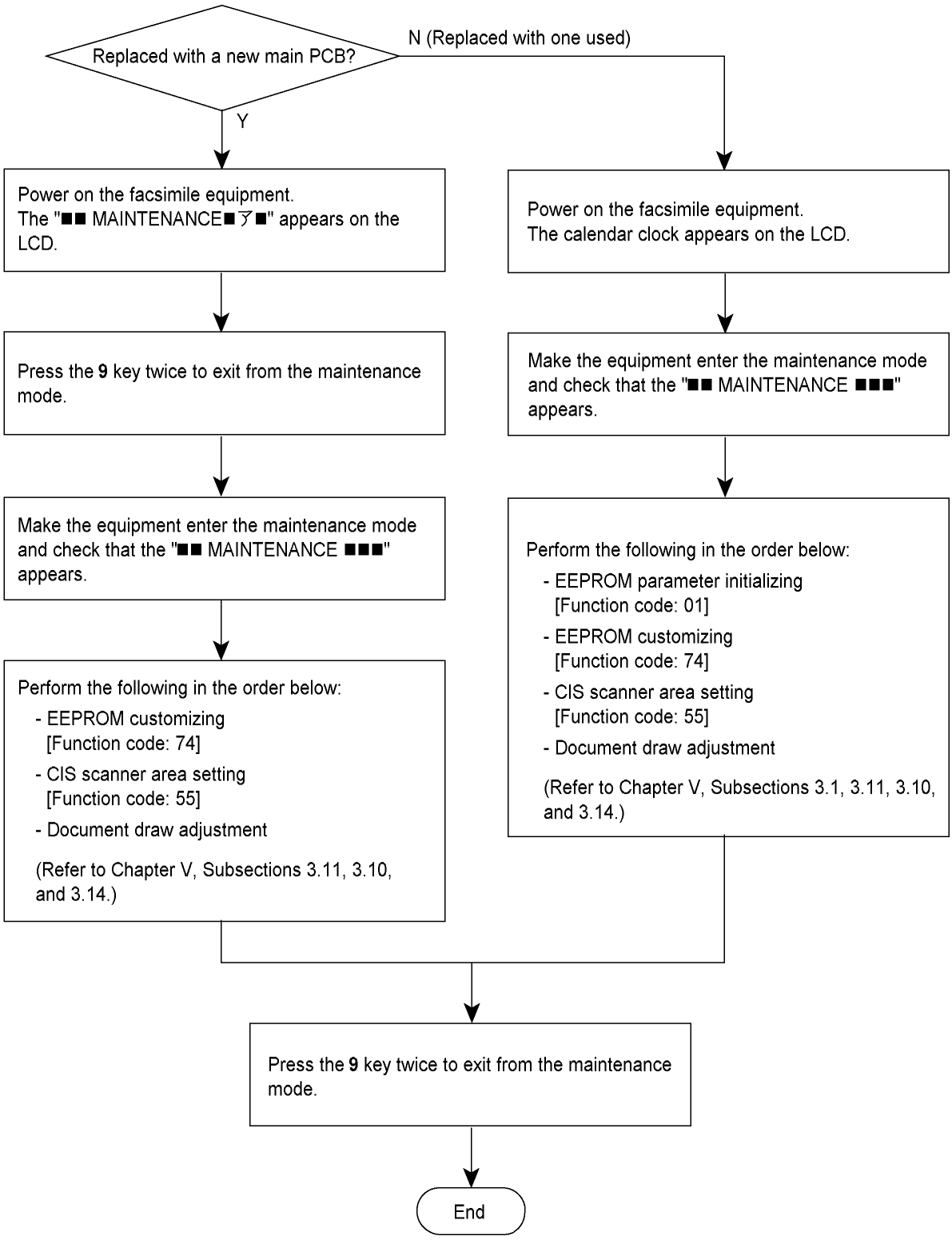

1.11 Speaker, PC I/F Modular ASSY, and Ribbon Shaft Stopper Spring

(1) Pull the speaker support spring to the right and lift up the speaker. The spring also comes off.

(2) Slightly lift up the main PCB (if mounted) and disconnect the speaker harness from the PCB.

(3) Unhook the PC I/F modular harness (which is routed through the duct) from latches “B” and “A,” and then take out the modular.

(4) Slightly lift up the main PCB (if mounted) and disconnect the PC I/F modular harness from the PCB.

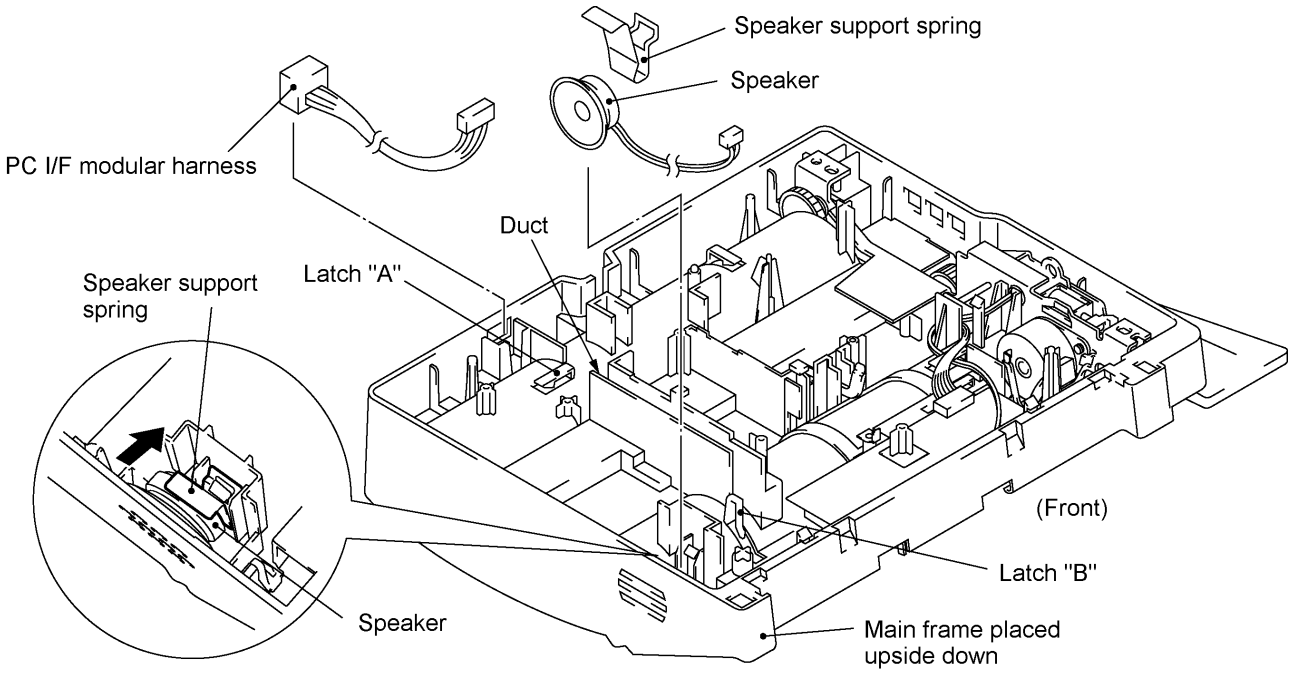

(5) Slightly pull up the rear end of the ribbon shaft stopper spring and take it out to the rear.

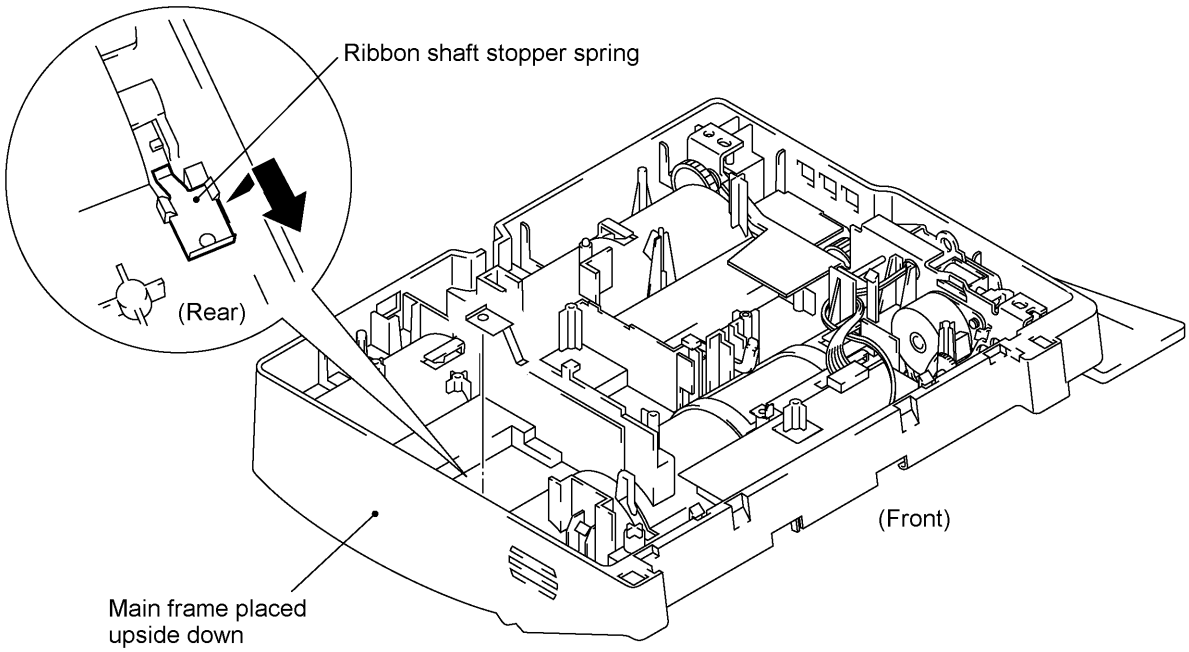

1.12 Drive Unit, Motor, and Main-Head Harness

(1) Slightly lift up the main PCB (if mounted), unhook the motor harness from latch "D," and disconnect the harness from the PCB.

(2) Slightly lift up the main PCB (if mounted), unhook the solenoid harness from latches "E" and “G” and the notch, then disconnect the harness from the PCB.

(3) Lift up the drive unit.

(4) Remove the motor from the drive unit by removing the screw.

(5) Slightly lift up the main PCB (if mounted) and disconnect the main-head harness from the PCB.

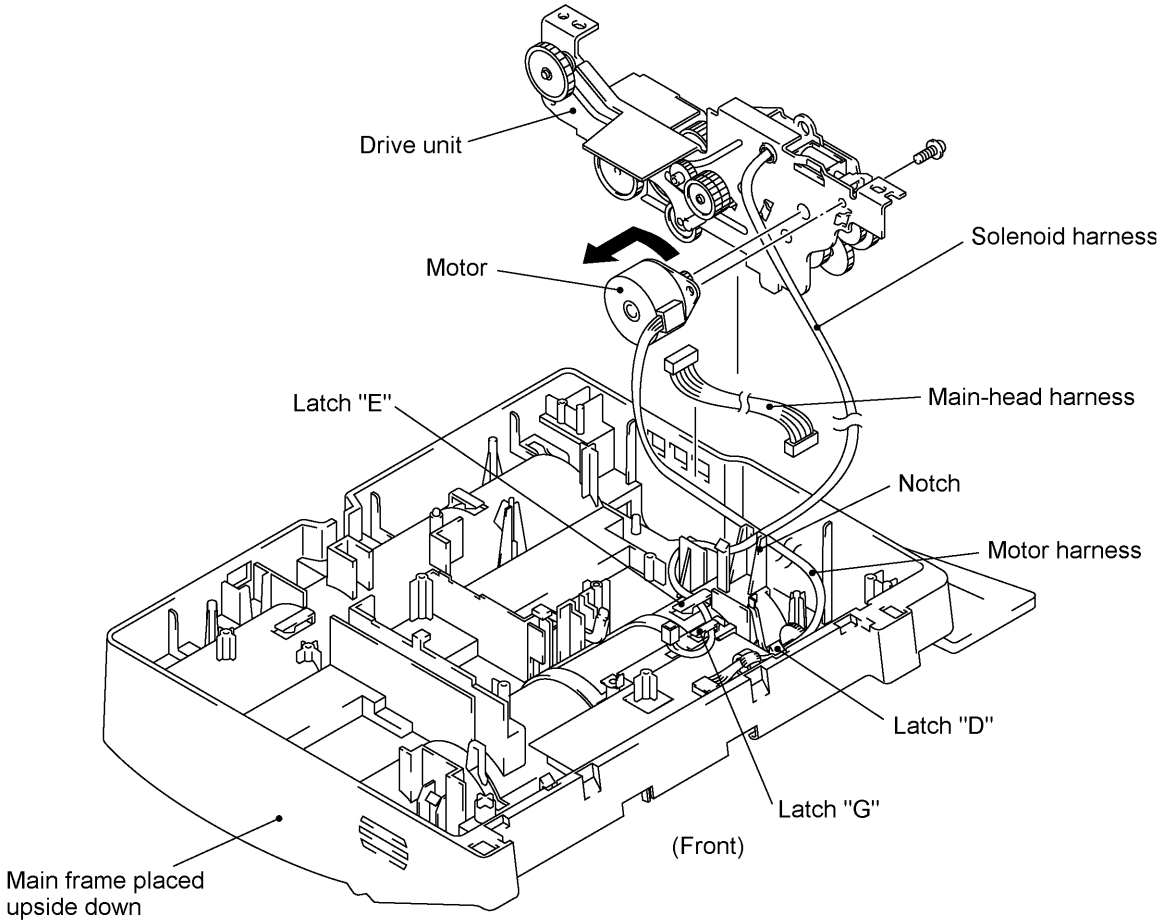

1.13 Panel-lock Leaf Springs

(1) Remove the panel-lock leaf springs by pushing them up with your finger from the bottom.

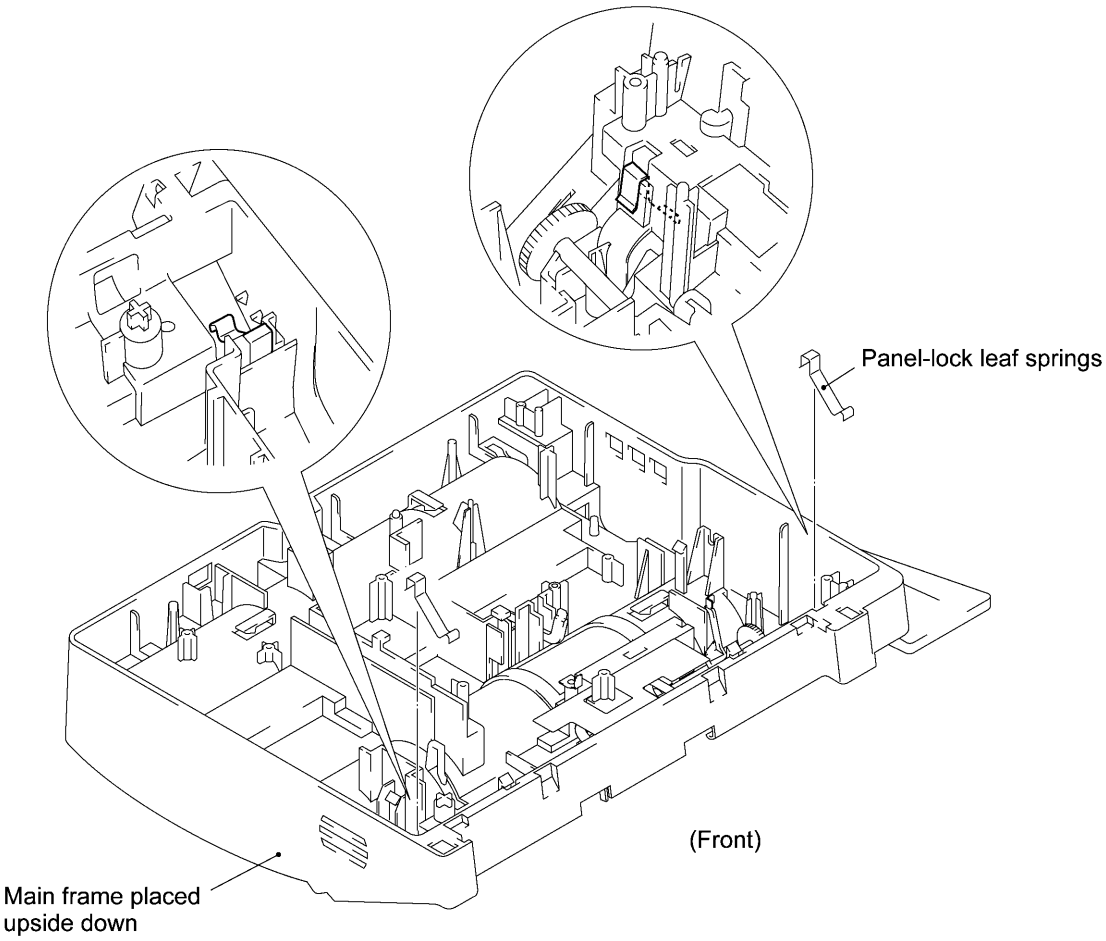

1.14 Cover Sensor Actuators and Pinch Roller

(1) Pull up the cover sensor actuator A and turn it to separate from the actuator B. The spring pops up and the actuator B drops.

(2) Remove the harness guide film.

NOTE: This film is attached to the main frame with double-sided adhesive tape. This film can be usable again as long as it is adhesive.

(3) Press the lock of each pinch roller spring and pull out the springs to the rear.

(4) Lift up the pinch roller.

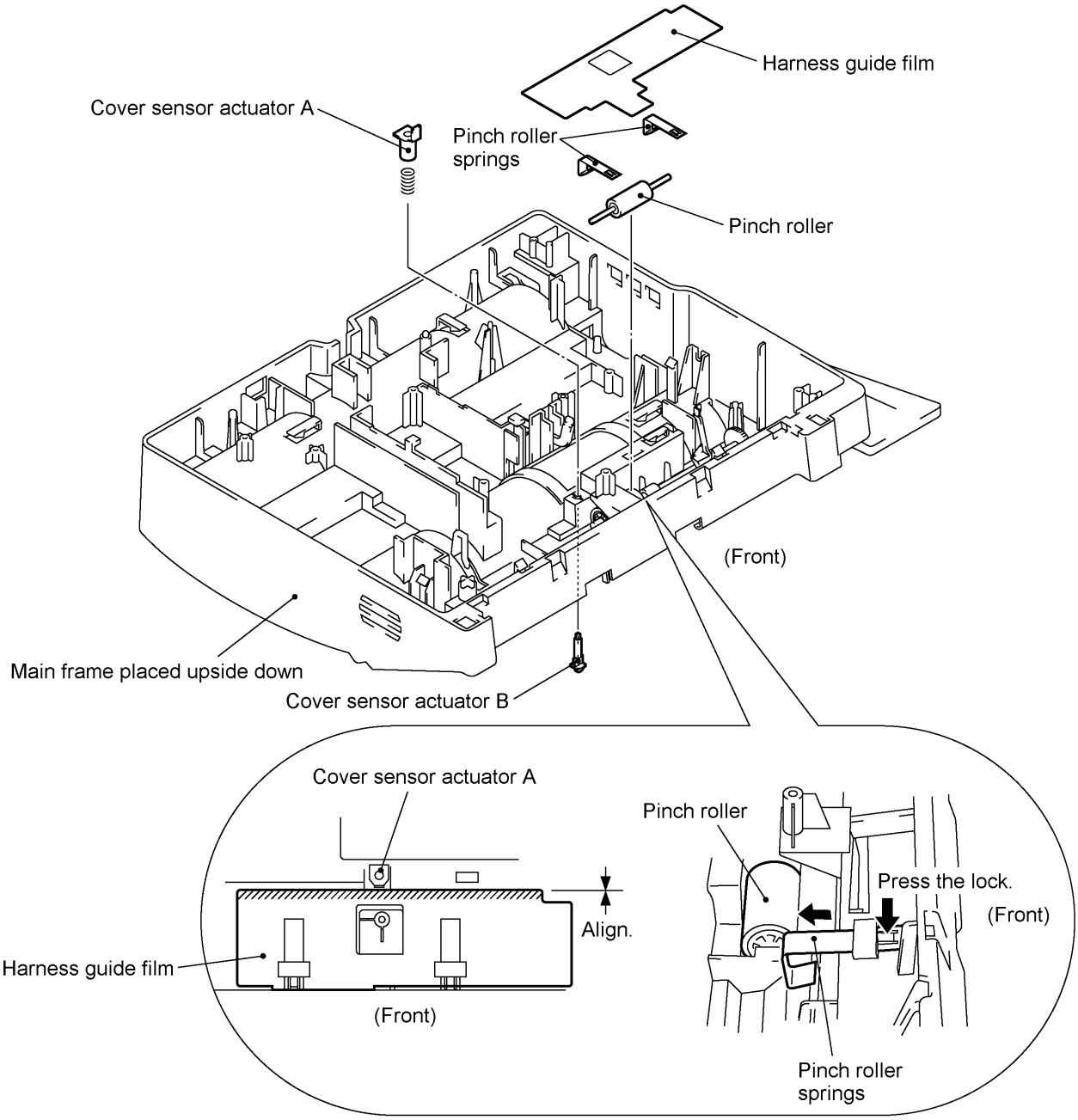

1.15 Document Rear Sensor Actuator, Separation Roller, and Ribbon Sensor Actuator

(1) Turn up the document rear sensor actuator to the front and pull it up.

(2) Push lock "a" (in the direction of arrow •) and pull the separation roller gear to the right (in the direction of arrow ❟). Then take out the separation roller and its gear.

(3) To remove the ribbon sensor actuator, you need to disengage the recording head ASSY from the recorder frame. (Refer to Section 1.5, (1) to (3).)

Push lock "b" to the rear, pinch the front end of the ribbon sensor actuator with your fingers, pull the right end up and rightwards, turn the actuator counterclockwise 180°, and then take it out of the main frame.

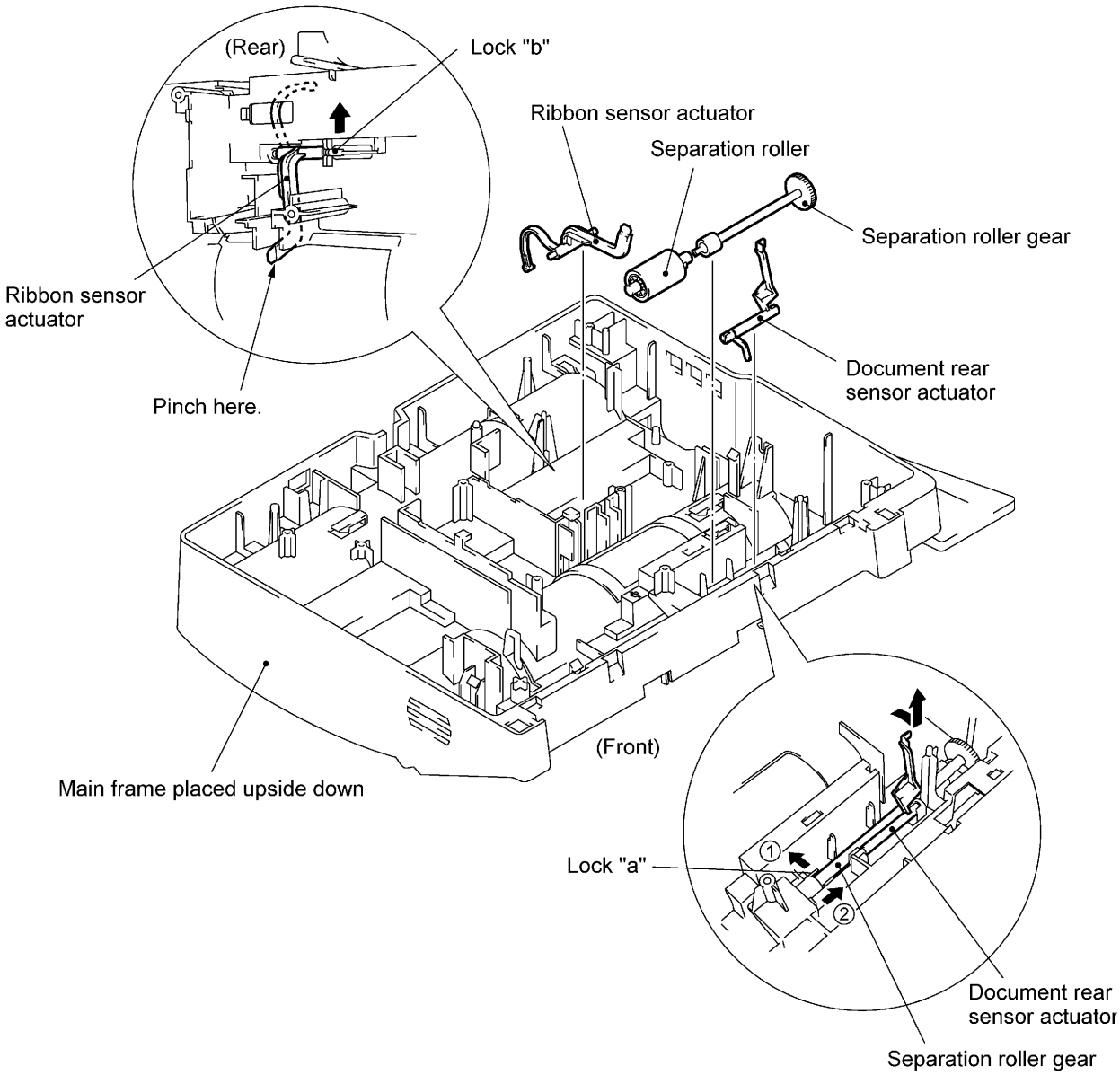

1.16 Handset Mount,* Hook Switch PCB,* and Dummy Mount**

(*For models except the FAX-910, **For the FAX-910 only)

(1) Insert the tip of a flat screwdriver into the slits of the handset mount* (or the dummy mount**) and unhook the mount from the main frame.

(2) To replace the hook switch PCB*, you need to disconnect the hook switch harness from the main PCB. (Refer to Section 1.10.)

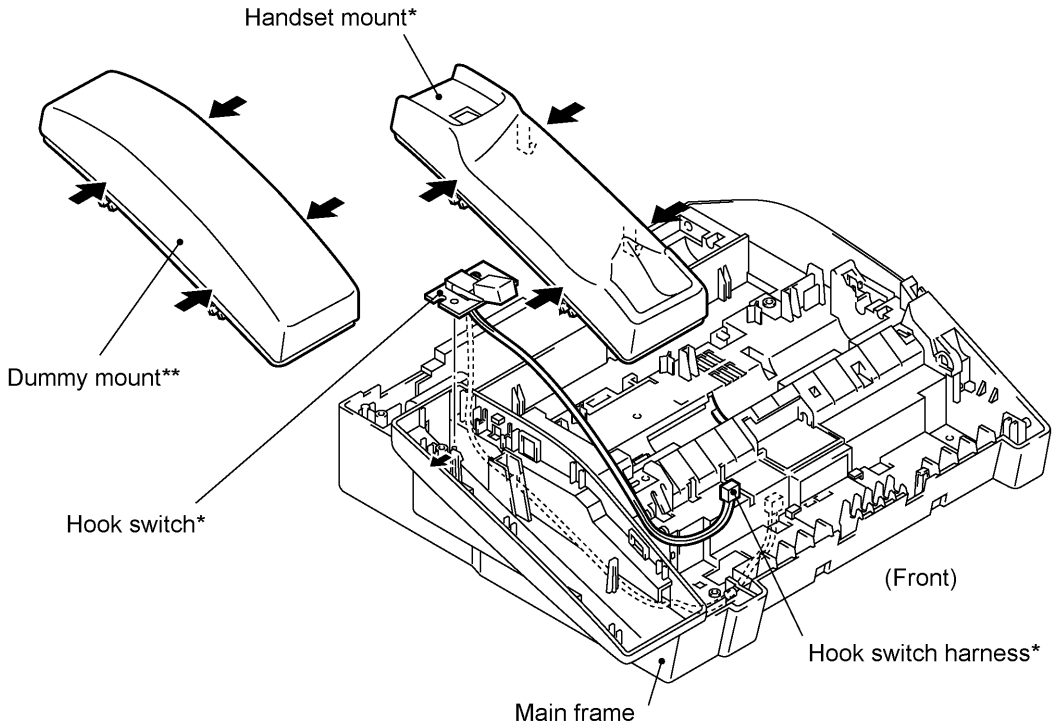

n Reassembling Notes

- When reinstalling the handset mount* (or the dummy mount**), first align the left edge with the main frame and then push down the right edge.

1.17 Harness Routing

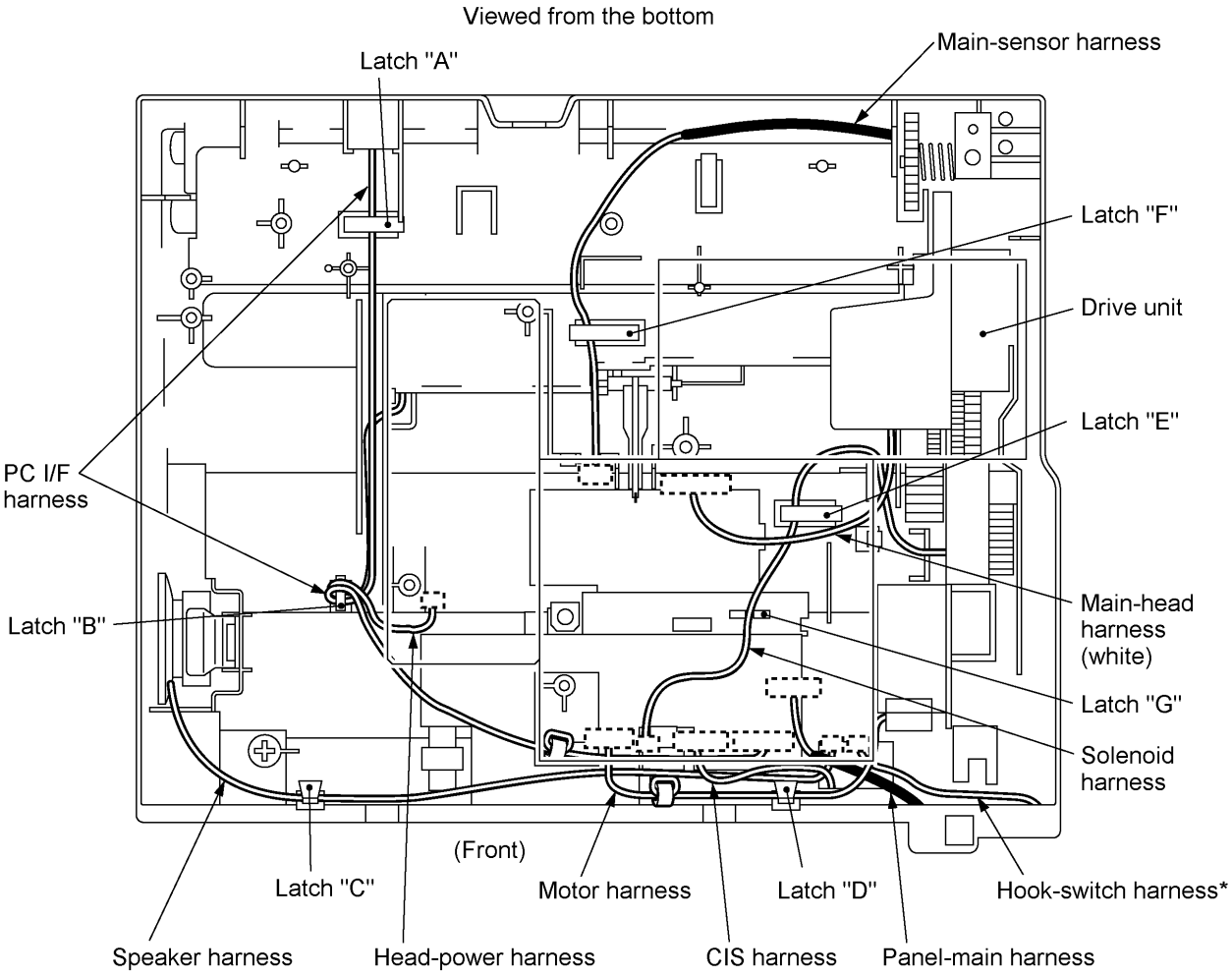

*Not provided on the FAX-910.

2. LUBRICATION

Apply the specified lubricants to the lubrication points as shown below.

Molykote EM-30L or EM-30LG

For points Ⓐ, apply a rice-sized pinch of grease (6 mm^3).

Floil GE-334C

For points Ⓕ, apply half of a rice-sized pinch of grease (3 mm^3).

[1] Control panel ASSY

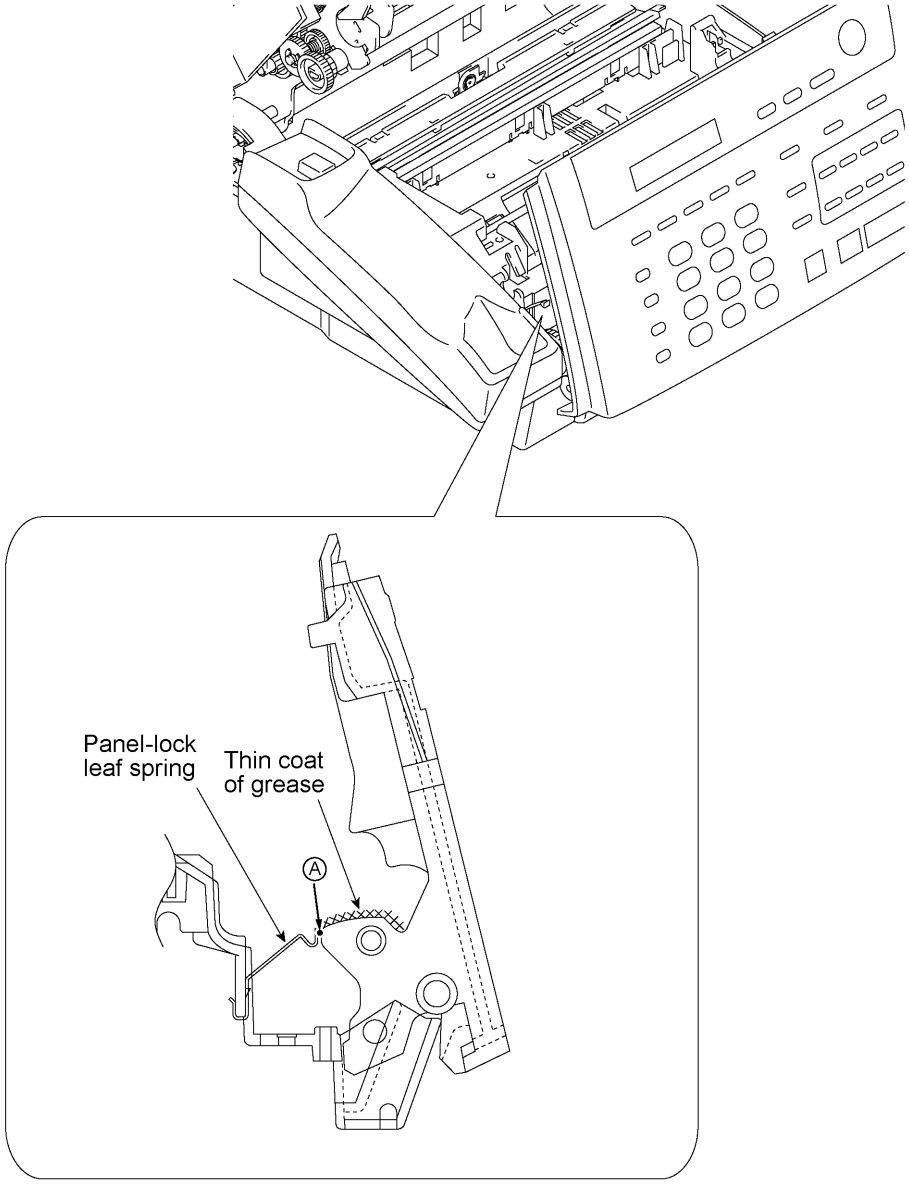

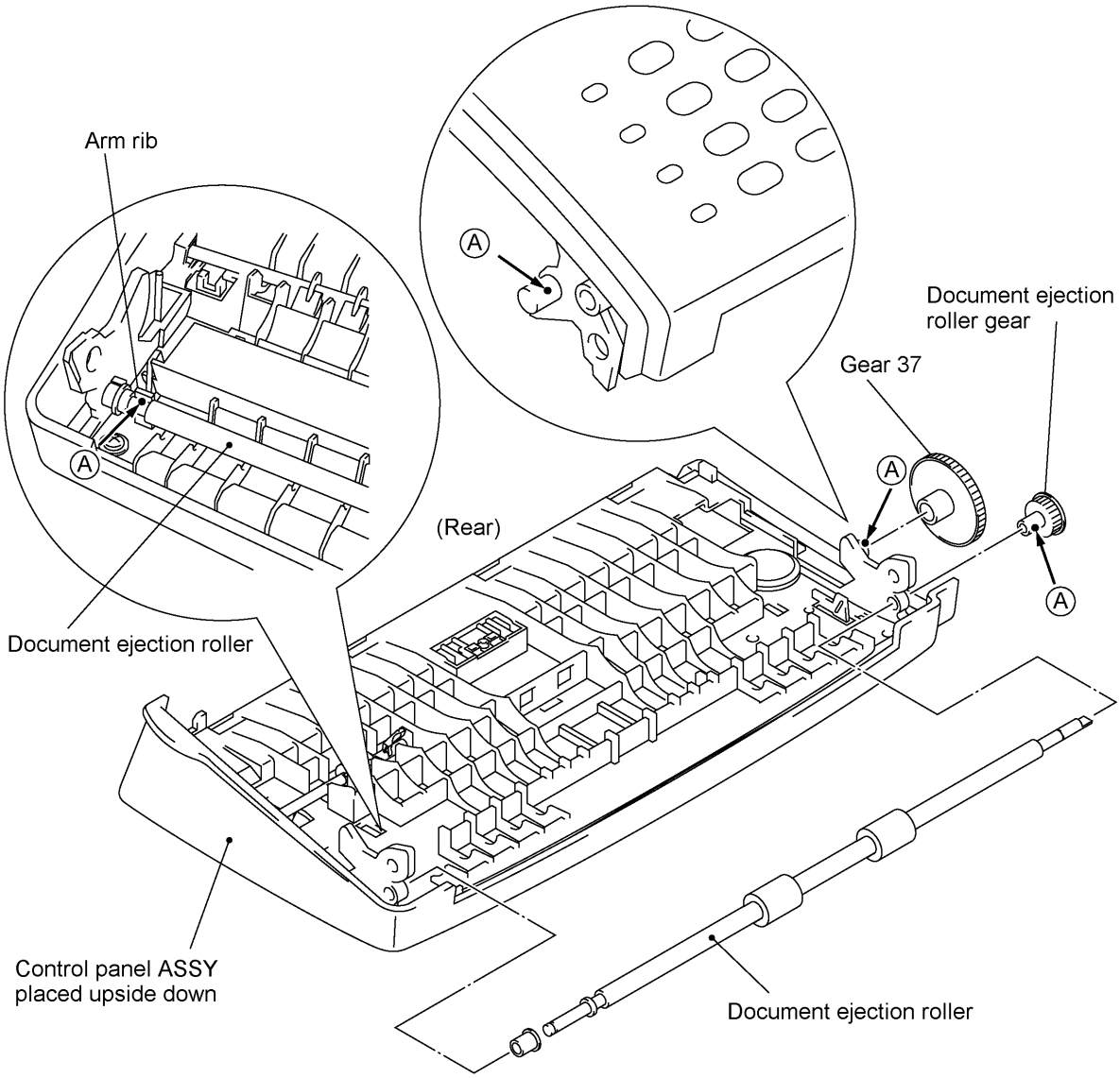
Arm rib
A
Document ejection roller gear
Gear 37
A
(Rear)
A
Document ejection roller
Control panel ASSY
placed upside down
Document ejection roller

[2] LF roller ASSY

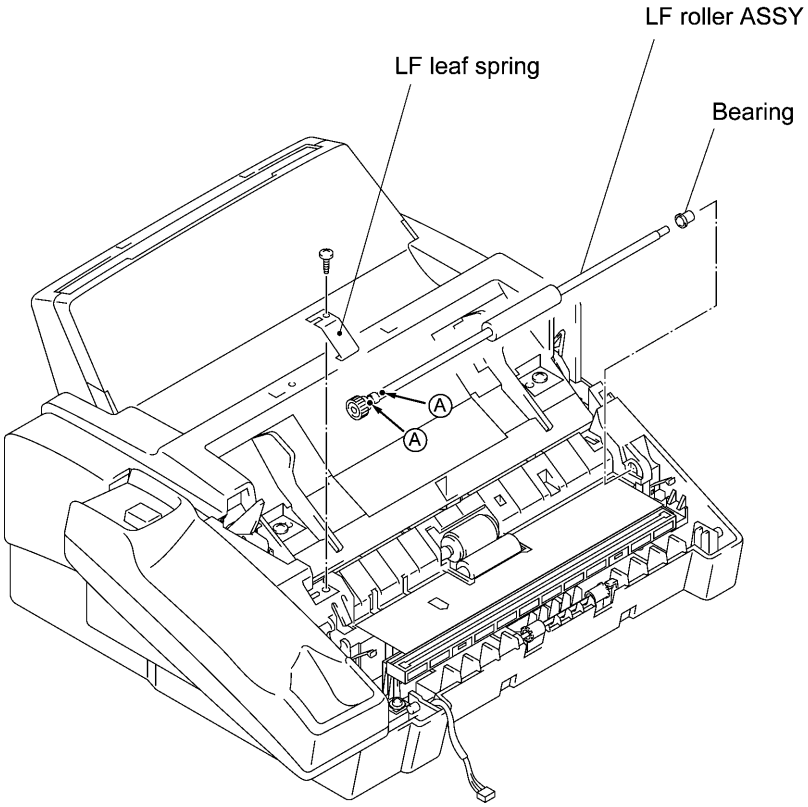

[3] Platen frame ASSY

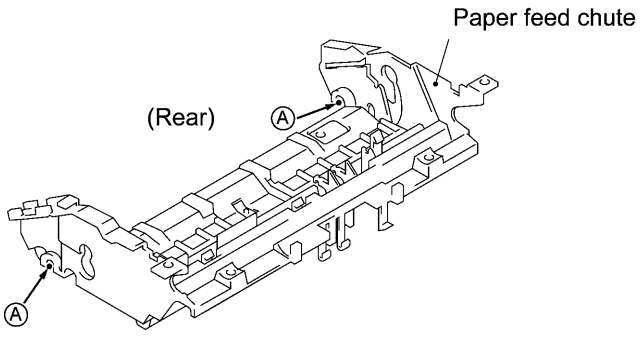

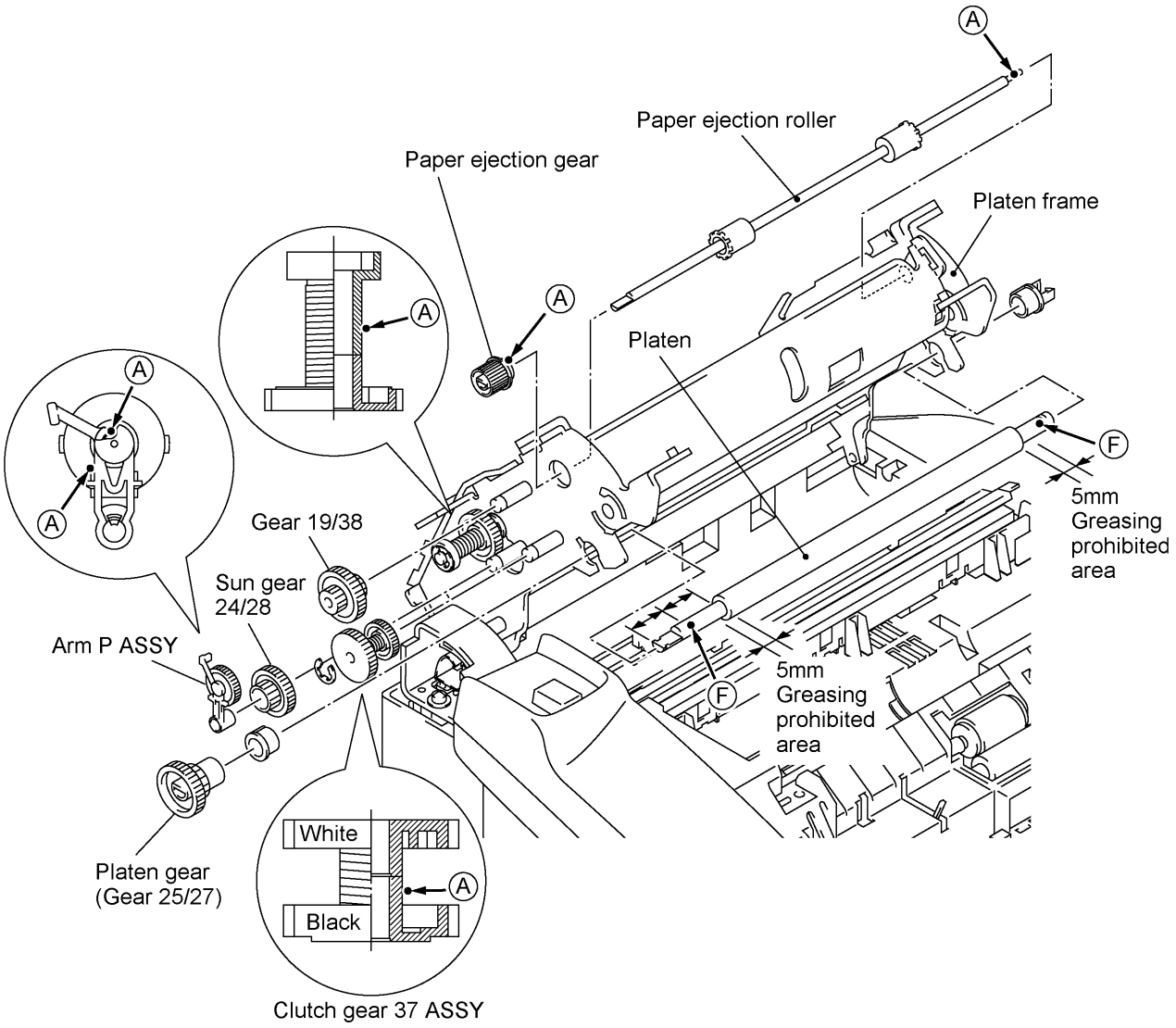
A
Paper ejection roller
Paper ejection gear
Platen frame
A
A
Platen
A
A
F
5mm
Greasing
prohibited
area
Gear 19/38
Sun gear
24/28
Arm P ASSY
5mm
Greasing
prohibited
area
F
White
A
Black
Platen gear
(Gear 25/27)
Clutch gear 37 ASSY

[4] Separation roller and main frame

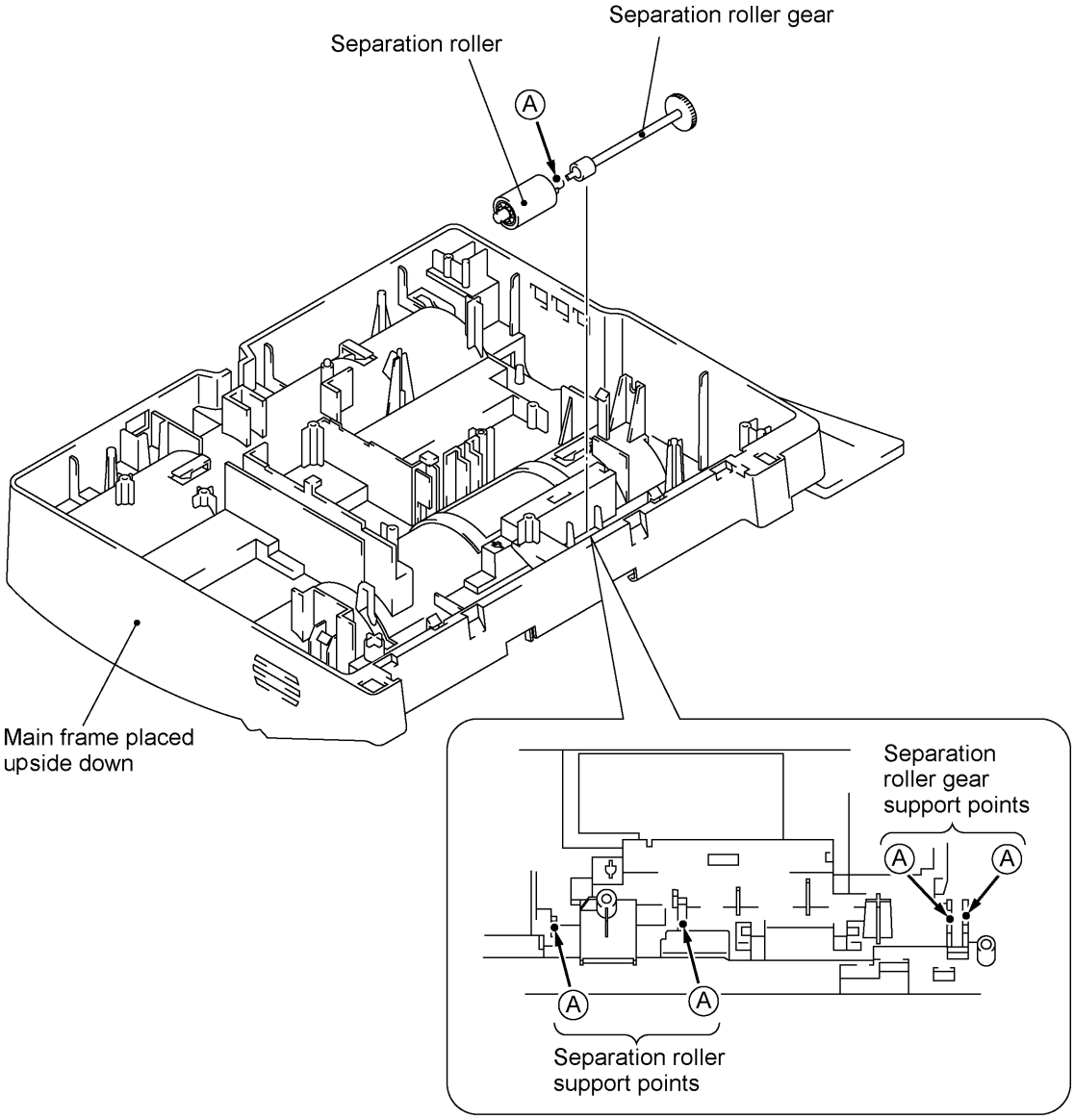

CHAPTER V.

MAINTENANCE MODE

CONTENTS

1. ENTRY INTO THE MAINTENANCE MODE V-1

2. LIST OF MAINTENANCE-MODE FUNCTIONS V-2

3. DETAILED DESCRIPTION OF MAINTENANCE-MODE FUNCTIONS V-4

3.1 EEPROM Parameter Initialization V-4
3.2 Printout of Scanning Compensation Data V-5
3.3 ADF Performance Test V-7
3.4 Test Pattern 1 ..... V-8
3.5 Firmware Switch Setting and Printout V-9
3.6 Operational Check of LCD V-50
3.7 Operational Check of Control Panel PCB V-50
3.8 Sensor Operational Check V-52
3.9 Fine Adjustment of Scanning Start/End Position V-53
3.10 CIS Scanner Area Setting V-54
3.11 EEPROM Customizing V-54
3.12 Equipment Error Code Indication V-55
3.13 Output of Transmission Log to the Telephone Line V-55
3.14 Document Draw Adjustment V-56

1. ENTRY INTO THE MAINTENANCE MODE

FAX750/FAX770/FAX870MC/MFC970MC: To make the facsimile equipment enter the maintenance mode, press the **Function**, *****, **2**, **8**, **6**, and **4** keys in this order.

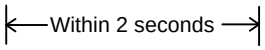

FAX-910/FAX-920/FAX-921/FAX-930/FAX-931/MFC-925: To make the facsimile equipment enter the maintenance mode, press the **Menu**, *****, **2**, **8**, **6**, and **4** keys in this order.

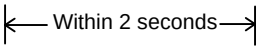

The equipment beeps for approx. one second and displays " ▮▮ MAINTENANCE ▮▮▮ " on the LCD, indicating that it is placed in the initial stage of the maintenance mode, a mode in which the equipment is ready to accept entry from the keys.

To select one of the maintenance-mode functions listed in Section 2, enter the corresponding 2-digit function code with the numerical keys on the control panel. (The details of each maintenance-mode function are described in Section 3.)

NOTES:

- Pressing the **9** key twice in the initial stage of the maintenance mode makes the equipment exit from the maintenance mode, restoring it to the standby state.
- Pressing the **Stop** button after entering only one digit restores the equipment to the initial stage of the maintenance mode.
- If an invalid function code is entered, the equipment resumes the initial stage of the maintenance mode.
- The 98-year model displays " ▮▮ MAINTENANCE ▮▮▮ "; the earlier models display " ▮▮ MAINTENANCE ▮ｦ▮ ."

2. LIST OF MAINTENANCE-MODE FUNCTIONS

Maintenance-mode Functions

Function Code	Function	Reference Subsection (Page)
01	EEPROM Parameter Initialization	3.1 (V-4)
02	————	————
03	————	————
04	————	————
05	Printout of Scanning Compensation Data	3.2 (V-5)
06	————	————
07	————	————
08	ADF* Performance Test	3.3 (V-7)
09	Test Pattern 1	3.4 (V-8)
10	Firmware Switch Setting	3.5 (V-9)
11	Printout of Firmware Switch Data	3.5 (V-49)
12	Operational Check of LCD	3.6 (V-50)
13	Operational Check of Control Panel PCB (Check of Keys and Buttons)	3.7 (V-50)
32	Sensor Operational Check	3.8 (V-52)
54	Fine Adjustment of Scanning Start/End Position	3.9 (V-53)
55	CIS Scanner Area Setting	3.10 (V-54)
74	EEPROM Customizing	3.11 (V-54)
82	Equipment Error Code Indication	3.12 (V-55)
87	Output of Transmission Log to the Telephone Line	3.13 (V-55)
91	EEPROM Parameter Initialization (except the telephone number storage area)	3.1 (V-4)
99	Exit from the Maintenance Mode	---- (V-1)
-----	Document Draw Adjustment	3.14 (V-56)

* ADF: Automatic document feeder

- **IMPORTANT** -

Basically, the maintenance-mode functions listed on the previous page should be accessed by service personnel only. However, you may allow end users to access some of these under the guidance of service personnel (e.g., by telephone).

The user-accessible functions (codes 10, 11, 12, 82, 87 and 91) are shaded in the table given on the previous page. Function code 10 accesses the firmware switches WSW01 to WSW36, each of which has eight selectors. You should not allow end users to access all of those selectors, but you may allow them to access user-accessible selectors which are shaded in the firmware switch tables in Subsection 3.5.

The service personnel should instruct end users to follow the procedure given below.

(1) FAX750/FAX770/FAX870MC/MFC970MC: Press the **Function** and **Mode** keys in this order.
FAX-910/FAX-920/FAX-921/FAX-930/FAX-931/MFC-925: Press the **Menu** and **Mode** keys in this order.
The LCD clears the current display.
NOTE: The **Mode** key is inoperable during standby for redialing and timer.

(2) Press the **0** key.

(3) Enter the desired function code (10, 11, 12, 82, 87, or 91) with the numerical keys.
For function code 10, access the desired firmware switch according to the operating procedure described in Subsection 3.5.

(4) To make the equipment return to the standby state, press the **Stop** key.

FAX750/FAX770/FAX-910/FAX-920/FAX-921/MFC-925

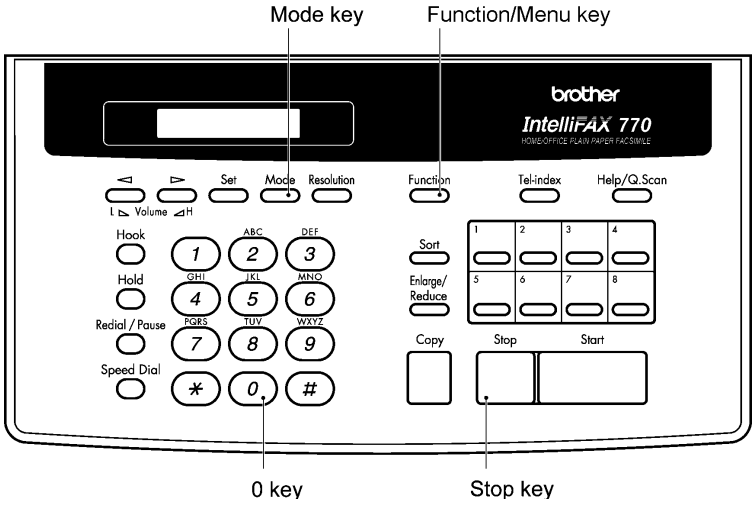

FAX870MC/FAX-930/FAX-931/MFC970MC

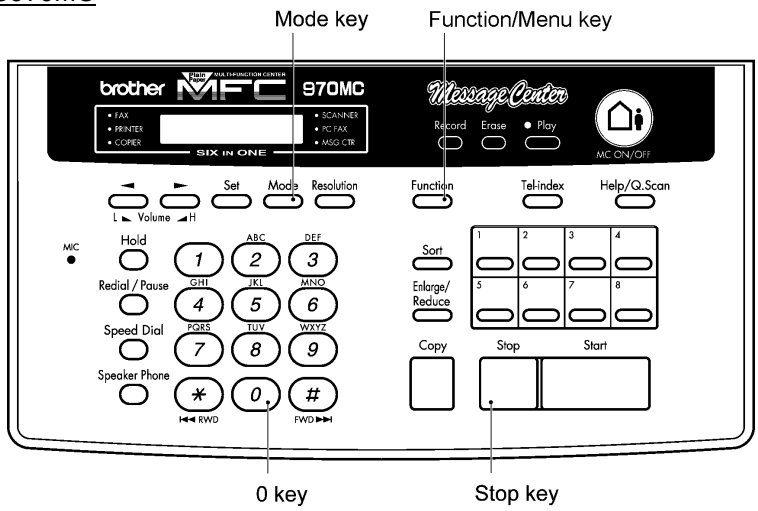

3. DETAILED DESCRIPTION OF MAINTENANCE-MODE FUNCTIONS

3.1 EEPROM Parameter Initialization

n Function

The equipment initializes the parameters, user switches, and firmware switches registered in the EEPROM, to the initial values. Entering the function code 01 initializes all of the EEPROM areas, but entering 91 does not initialize some areas, as listed below.

Data item \ Function code	01	91
Maintenance-mode functions User switches Firmware switches Remote activation code Activity report Distinctive ringing patterns registered	All of these will be initialized	These will be initialized
Station ID data Outside line number Cover page custom comments Remote access code FAX forwarding/paging Personal mailbox password Telephone function registration One-touch dialing Speed dialing Group dialing		These will not be initialized
EEPROM customizing code (4-digit)	This will not be initialized. (Note that the first digit of the 4-digit code will be initialized to "0." If the code is 1001, for example, it will be initialized to 0001.)	

NOTE: If you replace the main PCB with one used for other facsimile equipment, carry out this procedure and then customize the EEPROM (maintenance-mode function code 74 in Section 3.11).

n Operating Procedure

(1) Press the **0** and **1** keys (or the **9** and **1** keys according to your need) in this order in the initial stage of the maintenance mode.

The "PARAMETER INIT" will appear on the LCD.

(2) Upon completion of parameter initialization, the equipment returns to the initial stage of the maintenance mode.

3.2 Printout of Scanning Compensation Data

n Function

The equipment prints out the white and black level data for scanning compensation.

n Operating Procedure

Do not start this function merely after powering on the equipment but start it after carrying out a sequence of scanning operation. Unless the equipment has carried out any scanning operation, this function cannot print out correct scanning compensation data. This is because at the start of scanning operation, the equipment initializes white and black level data and takes in the scanning compensation reference data.

(1) Press the **0** and **5** keys in this order in the initial stage of the maintenance mode.

The "WHITE LEVEL 1" will appear on the LCD.

(2) The equipment prints out the scanning compensation data list containing the following:

a) White level data (208 bytes)
b) Black level data (1 byte)
c) Initial clamp PWM value (1 byte)
d) Clamp PWM value (1 byte)
e) Compensation data for background color (1 byte)
f) Initial LED light intensity value (1 byte)
g) LED light intensity value (1 byte)
h) LED light intensity value on the white film of the document pressure bar ASSY and documents (2 bytes)
i) Document rear sensor adjustment value (1 byte)

(3) Upon completion of recording of the compensation data list, the equipment returns to the initial stage of the maintenance mode.

NOTE: If any data is abnormal, its code will be printed in inline style, as shown on the next page.

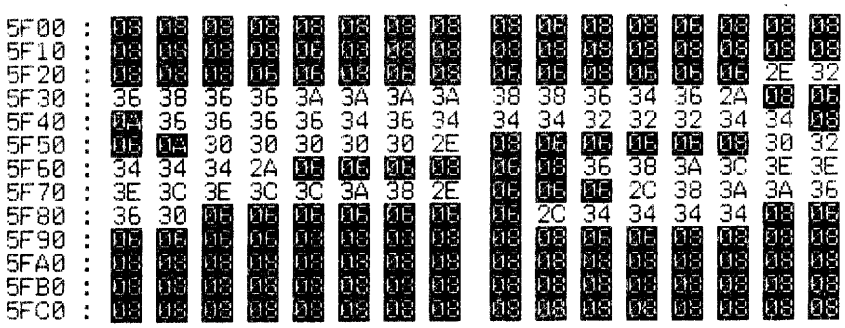

```
5F00 : 00
5F00 : 99
5F00 : 99
5F00 : FF
5F00 : 91
5F00 : 8D
5F00 : 8E 8D
5F00 : B9
```

Scanning Compensation Data List

3.3 ADF Performance Test

n Function

The equipment counts the documents fed by the automatic document feeder (ADF) and displays the count on the LCD for checking the ADF performance.

n Operating Procedure

(1) Set documents (Allowable up to the ADF capacity) in the initial stage of the maintenance mode.

The "DOC. READY" will appear on the LCD.

(2) Press the **0** and **8** keys in this order.

The equipment

i) copies the 1st document and displays “COPY P.01 STD” on the LCD.

ii) feeds in and out the 2nd through 4th documents while counting without copying them as the LCD shows the corresponding count,

iii) copies the 5th document and displays “COPY P.05 STD” on the LCD,

iv) feeds in and out the 6th through 9th documents while counting without copying them as the LCD shows the corresponding count, and

v) copies the 10th document and displays “COPY P.10 STD” on the LCD.

(3) Upon completion of feeding in and out all of the documents, the final count appears on the LCD.

(4) Press the **Stop** key to return the equipment to the initial maintenance mode.

3.4 Test Pattern 1

n Function

This function, much like the copying function, prints out test pattern 1 to allow the service personnel to check for record data missing or print quality.

n Operating Procedure

Press the **0** and **9** keys in this order in the initial stage of the maintenance mode.

The figure below shows test pattern 1.

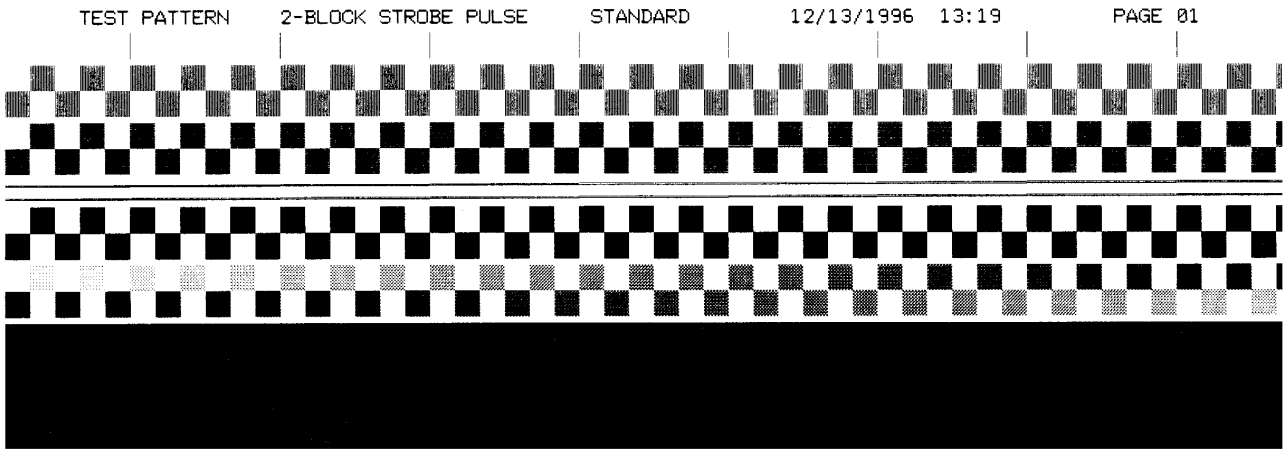

Test Pattern 1

3.5 Firmware Switch Setting and Printout

[A] Firmware switch setting

n Function

The facsimile equipment incorporates the following firmware switch functions (WSW01 through WSW36) which may be activated with the procedures using the control panel keys and buttons.
The firmware switches have been set at the factory in conformity to the communications standards and codes of each country. Do not disturb them unless necessary. Some firmware switches may not be applicable in some versions. The firmware switch data list indicates "Not used." for those inapplicable switches.

Firmware Switches (WSW01 through WSW36)

WSW No.	Function	Reference Page
WSW01	Dial pulse setting	V-11
WSW02	Tone signal setting	V-12
WSW03	PABX mode setting	V-13
WSW04	TRANSFER facility setting	V-15
WSW05	1st dial tone and busy tone detection	V-16
WSW06	**Pause** key setting and 2nd dial tone detection	V-18
WSW07	Dial tone setting 1	V-20
WSW08	Dial tone setting 2	V-21
WSW09	Protocol definition 1	V-22
WSW10	Protocol definition 2	V-23
WSW11	Busy tone setting	V-24
WSW12	Signal detection condition setting	V-25
WSW13	Modem setting	V-26
WSW14	AUTO ANS facility setting	V-27
WSW15	REDIAL facility setting	V-28
WSW16	Function setting 1	V-29
WSW17	Function setting 2	V-30
WSW18	Function setting 3	V-31
WSW19	Transmission speed setting	V-32
WSW20	Overseas communications mode setting	V-33
WSW21	TAD setting 1	V-34
WSW22	ECM setting	V-35
WSW23	Communications setting	V-36
WSW24	TAD setting 2	V-37
WSW25	TAD setting 3	V-38
WSW26	Function setting 4	V-39
WSW27	Function setting 5	V-40
WSW28	Function setting 6	V-41
WSW29	Function setting 7	V-42
WSW30	Function setting 8	V-43
WSW31	Function setting 9	V-44
WSW32	Function setting 10	V-45
WSW33	Function setting 11	V-46
WSW34	Function setting 12	V-47
WSW35	Function setting 13	V-48
WSW36	Function setting 14	V-48

n Operating Procedure

(1) Press the **1** and **0** keys in this order in the initial stage of the maintenance mode.

The equipment displays the "WSW00" on the LCD and becomes ready to accept a firmware switch number.

(2) Enter the desired number from the firmware switch numbers (01 through 36).

The following appears on the LCD:

WSWXX = 0 0 0 0 0 0 0 0

(3) Use the ◀ and ▶ keys to move the cursor to the selector position to be modified.

(4) Enter the desired number using the **0** and **1** keys.

(5) Press the **Set** key. This operation saves the newly entered selector values onto the EEPROM and readies the equipment for accepting a firmware switch number.

(6) Repeat steps (2) through (5) until the modification for the desired firmware switches is completed.

(7) Press the **Set** or **Stop** key to return the equipment to the initial stage of the maintenance mode.

NOTES:
- To cancel this operation and return the equipment to the initial stage of the maintenance mode during the above procedure, press the **Stop** key.
- If there is a pause of more than one minute after a single-digit number is entered for double-digit firmware switch numbers, the equipment will automatically return to the initial stage of the maintenance mode.

n Note

The user-accessible selectors of the firmware switches are shaded in the tables given on the following pages.

n Detailed Description for the Firmware Switches

WSW01 (Dial pulse setting)

Selector No.	Function	Setting and Specifications
1 2	Dial pulse generation mode	No. 1 2 0 0 : N 0 1 : N+1 1 0 : 10-N 1 1 : N
3 4	Break time length in pulse dialing	No. 3 4 0 0 : 60 ms 0 1 : 67 ms 1 0 : 40 ms (for 16 PPS) 1 1 : 64 ms (at 106-ms intervals)
5 6	Inter-digit pause	No. 5 6 0 0 : 800 ms 0 1 : 850 ms 1 0 : 950 ms 1 1 : 600 ms
7	Switching between pulse (DP) and tone (PB) dialing, by the function switch	0: Yes 1: No
8	Default dialing mode, pulse (DP) or tone (PB) dialing	0: PB 1: DP

- **Selectors 1 and 2: Dial pulse generation mode**

  These selectors set the number of pulses to be generated in pulse dialing.

  N: Dialing "N" generates "N" pulses. (Dialing "0" generates 10 pulses.)
  N + 1: Dialing "N" generates "N + 1" pulses.
  10 - N: Dialing "N" generates "10 - N" pulses.

- **Selectors 3 and 4: Break time length in pulse dialing**

  These selectors set the break time length in pulse dialing.
  (Example: If "1," "2," and "3" are dialed when N is set by selectors 1 and 2.)

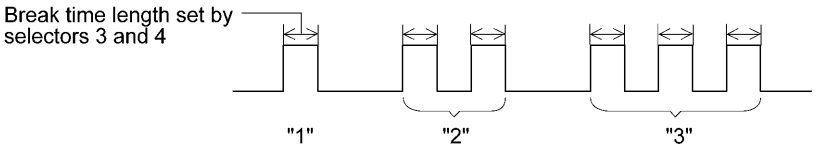

- **Selectors 5 and 6: Inter-digit pause**

  These selectors set the inter-digit pause in pulse dialing.
  (Example: If "1," "2," and "3" are dialed when N is set by selectors 1 and 2.)

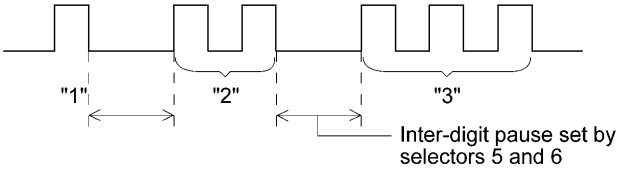

- **Selector 7: Switching between pulse (DP) and tone (PB) dialing, by the function switch**

  This selector determines whether or not the dialing mode may be switched between the pulse (DP) and tone (PB) dialing by using the function switch.

- **Selector 8: Default dialing mode, pulse (DP) or tone (PB) dialing**

  This selector sets the default dialing mode (pulse dialing or tone dialing) which may be changed by the function switch. If the user switches it with the function switch when selector 7 is set to "0," the setting specified by this selector will also be switched automatically.

WSW02 (Tone signal setting)

Selector No.	Function	Setting and Specifications
1 2	Tone signal transmission time length	No. 1 2 0 0 : 70 ms 0 1 : 80 ms 1 0 : 90 ms 1 1 : 100 ms
3 4	Min. pause in tone dialing	No. 3 4 0 0 : 70 ms 0 1 : 80 ms 1 0 : 90 ms 1 1 : 140 ms
5 | 8	Attenuator for pseudo ring backtone to the line (selectable in the range of 0-15 dB)	0: 0 dB 1: 8 dB 0: 0 dB 1: 4 dB 0: 0 dB 1: 2 dB 0: 0 dB 1: 1 dB

- **Selectors 1 through 4: Tone signal transmission time length and Min. pause in tone dialing**

  These selectors set the tone signal transmission time length and minimum pause in tone dialing.

  (Example: If "1," "2," "3," "4," and "5" are dialed.)

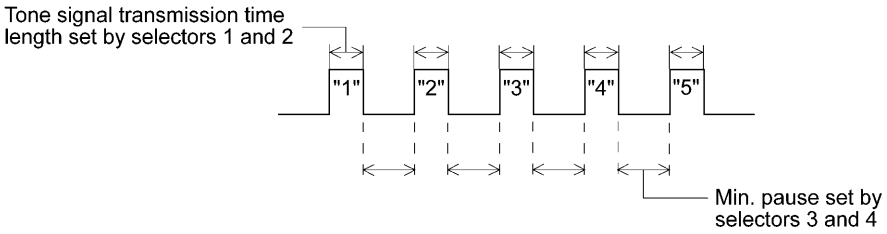

- **Selectors 5 through 8: Attenuator for pseudo ring backtone to the line**

  These selectors are used to adjust the sound level of beep generated as a ring backtone in the F/T mode or as a signal during remote control operation or at the start of ICM recording.

  Setting two or more selectors to “1” produces addition of attenuation assigned to each selector. This setting will be limited if selector 8 of WSW23 is set to “0.”

WSW03 (PABX* mode setting)

Selector No.	Function	Setting and Specifications
1	CNG detection when sharing a modular wall socket with a telephone	0: A 1: B
2 | 4	Min. detection time length of PABX* dial tone, required for starting dialing	No. 2 3 4 0 0 0 : 50 ms 0 0 1 : 210 ms 0 1 0 : 500 ms 0 1 1 : 800 ms 1 0 0 : 900 ms 1 0 1 : 1.5 sec. 1 1 0 : 2.0 sec. 1 1 1 : 2.5 sec.
5	CNG detection when sharing a modular wall socket with a telephone	0: A 1: B
6 7	Dial tone detection in PABX*	No. 6 7 0 0 : No detection (3.5 sec. WAIT) 0 1 : No detection (5 sec. WAIT) 1 0 : No detection (7 sec. WAIT) 1 1 : Detection (Frequency only)
8	"R" key function	0: 1st dial tone detection add 1: No 1st dial tone detection

* PABX: Private automatic branch exchange

NOTE: Selectors 2 through 4 and 6 through 8 are not applicable where no PABX is installed.

- **Selectors 1 and 5: CNG detection when sharing a modular wall socket with a telephone**

  These selectors determine whether or not the equipment detects a CNG signal when a line is connected to a telephone sharing a modular wall socket with the equipment. Upon detection of CNG signals by the number of cycles specified by these selectors, the equipment interprets CNG as an effective signal and then starts FAX reception.

Selector No. 1	Selector No. 5	Cycle
0 (A)	0 (A)	0.5 cycle
0 (A)	1 (B)	1.0 cycle
1 (B)	0 (A)	1.5 cycles
1 (B)	1 (B)	2.0 cycles

- **Selectors 2 through 4: Min. detection time length of PABX dial tone, required for starting dialing**

  Upon detection of the PABX dial tone for the time length set by these selectors, the equipment starts dialing.

  These selectors are effective only when both selectors 6 and 7 are set to "1" (Detection).

- **Selectors 6 and 7: Dial tone detection in PABX**

  These selectors activate or deactivate the dial tone detection function which detects a dial tone when a line is connected to the PABX.

  Setting both of these selectors to “1” activates the dial tone detection function so that the equipment starts dialing upon detection of a dial tone when a line is connected.

  Other setting combinations deactivate the dial tone detection function so that the equipment starts dialing after the specified WAIT (3.5, 5.0, or 7.0 sec.) without detection of a dial tone when a line is connected.

- **Selector 8: “R” key function**

  This selector determines whether or not the 1st dial tone detection function (specified by selectors 1 through 3 of WSW05) is added to the R key.

  If this selector is set to “0,” pressing the R key automatically activates the 1st dial tone detection function when the PABX and the automatic calling are selected by using the function switch. If you press the R key and a dial number in succession, the equipment will automatically carry out the 1st dial tone detection function following the original transfer function as shown below.

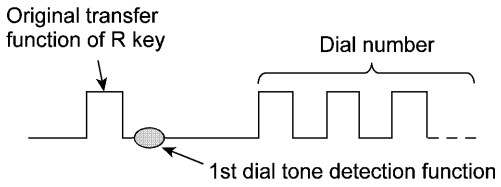

WSW04 (TRANSFER facility setting)

Selector No.	Function	Setting and Specifications
1	Earth function in transfer facility	0: Provided 1: Not provided
2 3	Dual tone detection frequency in ICM recording	No. 2 3 0 0 : 350 and 440 Hz (A) 0 1 : 440 and 480 Hz (B) 1 x : 480 and 620 Hz (C)
4	Tone detection sensitivity in ICM recording	0: OFF 1: High
5 6	Earth time length for earth function	No. 5 6 0 0 : 200 ms 0 1 : 300 ms 1 0 : 500 ms 1 1 : 700 ms
7 8	Break time length for flash function	No. 7 8 0 0 : 80 ms 0 1 : 110 ms 1 0 : 250 ms 1 1 : 500 ms

NOTE: Selectors 1 and 5 through 8 are not applicable in those countries where no transfer facility is supported.

NOTE: Selectors 2 through 4 are applicable to those models equipped with a built-in TAD.

NOTE: Selectors 2 and 3 are applicable in the U.S.A.

- **Selector 1: Earth function in transfer facility**

  This selector determines whether or not the earth function is added to the transfer setting menu to be accessed by the function switch.

- **Selectors 2 and 3: Dual tone detection frequency in ICM recording**

  If the equipment detects either of the frequencies set by these selectors in ICM recording, it will disconnect the line. For example, if these selectors are set to “0, 0,” the equipment will disconnect the line upon detection of 350 Hz or 440 Hz.

- **Selectors 4: Tone detection sensitivity in ICM recording**

  Setting this selector to “1” increases the tone detection sensitivity in ICM recording.

- **Selectors 5 and 6: Earth time length for earth function**

  These selectors set the short-circuiting time length of the telephone line (La or Lb) to ground.

  This setting is effective only when the earth function is selected for the R key by using the function switch.

- **Selectors 7 and 8: Break time length for flash function**

  These selectors set the break time length.

  This setting is effective only when the flash function is selected for the R key by using the function switch.

WSW05 (1st dial tone and busy tone detection)

Selector No.	Function	Setting and Specifications
1 | 3	1st dial tone detection	No. 1 2 3 0 0 0 : 3.5 sec. WAIT 0 0 1 : 7.0 sec. WAIT 0 1 0 : 10.5 sec. WAIT 0 1 1 : 14.0 sec. WAIT 1 0 0 : 17.5 sec. WAIT 1 0 1 : 21.0 sec. WAIT 1 1 0 : 24.5 sec. WAIT 1 1 1 : Detection (Without WAIT)
4	Max. pause time allowable for remote ID code detection	0 : 2 seconds 1: 1 second
5 6	Busy tone detection in automatic sending mode	No. 5 6 0 0 : No detection 0 1 : Detection only after dialing 1 0 : No detection 1 1 : Detection before and after dialing
7	Busy tone detection in automatic receiving mode	0 : Yes 1: No
8	Not used.	

NOTE: Selectors 5 through 7 are not applicable in those countries where no busy tone detection is supported, e.g., U.S.A.

- **Selectors 1 through 3: 1st dial tone detection**

  These selectors activate or deactivate the 1st dial tone detection function which detects the 1st dial tone issued from the PSTN when a line is connected to the PSTN.

  Setting all of these selectors to "1" activates the dial tone detection function so that the equipment starts dialing upon detection of a dial tone when a line is connected. (However, in those countries which support no dial tone detection function, e.g., in the U.S.A., setting these selectors to "1" makes the equipment start dialing after a WAIT of 3.5 seconds.) For the detecting conditions of the 1st dial tone, refer to WSW07 and WSW08.

  Other setting combinations deactivate the dial tone detection function so that the equipment starts dialing after the specified WAIT (3.5, 7.0, 10.5, 14.0, 17.5, 21.0, or 24.5 seconds) without detection of a dial tone when a line is connected to the PSTN.

- **Selector 4: Max. pause time allowable for remote ID code detection**

  This selector sets the maximum pause time allowable for detecting the second digit of a remote ID code after detection of the first digit in remote reception.

  If selector 4 is set to "0" (2 seconds), for instance, only a remote ID code whose second digit is detected within 2 seconds after detection of the first digit will become effective so as to activate the remote function.

- **Selectors 5 and 6: Busy tone detection in automatic sending mode**

  These selectors determine whether or not the equipment automatically disconnects a line upon detection of a busy tone in automatic sending mode.

  Setting selector 6 to "0" ignores a busy tone so that the equipment does not disconnect the line.

  Setting selectors 5 and 6 to "0" and "1," respectively, makes the equipment detect a busy tone only after dialing and disconnect the line.

  Setting both of selectors 5 and 6 to "1" makes the equipment detect a busy tone before and after dialing and then disconnect the line.

- **Selector 7: Busy tone detection in automatic receiving mode**

  This selector determines whether or not the equipment automatically disconnects a line upon detection of a busy tone in automatic receiving mode.

WSW06 (Pause key setting and 2nd dial tone detection)

Selector No.	Function	Setting and Specifications
1 | 3	**Pause** key setting and 2nd dial tone detection	No. 1 2 3 0 0 0 : No pause 0 0 1 : 3.5 sec. WAIT 0 1 0 : 7 sec. WAIT 0 1 1 : 10.5 sec. WAIT 1 0 0 : 14 sec. WAIT 1 1 0 : 2nd dial tone detection only in pulse dialing (DP) system 1 0 1 : 2nd dial tone detection 1 1 1 : both in DP and push-button (PB) dialing system
4 | 6	Detection of international tone	No. 4 5 6 0 0 0 : 50 ms 0 0 1 : 210 ms 0 1 0 : 500 ms 0 1 1 : 800 ms 1 0 0 : 900 ms 1 0 1 : 1.5 sec. 1 1 0 : 2.0 sec. 1 1 1 : 2.5 sec.
7	No. of 2nd dial tone detection times	0: Once 1: Twice
8	2nd dial tone interrupt detecting time	0: 30 ms 1: 50 ms

NOTE: Selectors 4 through 8 are not applicable in those countries where no dial tone detection is supported, e.g., U.S.A.

Selectors 1 through 3: Pause key setting and 2nd dial tone detection

Selectors 1	2	3	
0	0	0	No WAIT is inserted even if the **Pause** key is pressed.
0	0	1	If you press the **Pause** key during dialing, the facsimile equipment will insert WAIT as defined in the above table. If the **Pause** key is pressed repeatedly, the equipment inserts the specified WAIT multiplied by the number of depressions. It applies also in hook-up dialing.
0	1	0	
0	1	1	
1	0	0	
1	0	1	When these selectors are set to "1, 0, 1": If you press the **Pause** key during dialing, the equipment will wait for the 2nd dial tone to be sent via the communications line. When these selectors are set to "1, 1, 0" or "1, 1, 1": If you press the **Pause** key during dialing, the equipment will first wait for the 2nd dial tone to be sent via the communications line. After that, the equipment will insert a WAIT of 3.5 seconds. If no 2nd dial tone is received within the specified time length (set by WSW08), the equipment will disconnect the line if in automatic dialing or it will start transmitting the dial signal if given after depression of the **Pause** key in hook-up dialing. (In those countries where no dial tone detection function is supported, setting these selectors to "1, 1, 0," "1, 0, 1," or "1, 1, 1" inserts a WAIT of 3.5 seconds.)
1	1	0	
1	1	1	

Selectors 4 through 6: Detection of international tone

Upon detection of the 2nd dial tone for the time length specified by these selectors, the equipment starts dialing.

This setting is effective only when the 2nd dial tone detection function is activated by selectors 1 through 3 (Setting 1 0 1, 1 1 0, or 1 1 1).

This function does not apply in those countries where no dial tone detection function is supported.

Selector 7: No. of 2nd dial tone detection times

This selector sets the number of dial tone detection times required for starting dialing.

Selector 8: 2nd dial tone interrupt detecting time

This selector sets the allowable time length of an interrupt which should not be interpreted as an interrupt in the 2nd tone dialing.

WSW07 (Dial tone setting 1)

Selector No.	Function	Setting and Specifications
1 2	Frequency band range	No. 1 2 0 0 : Narrows by 10 Hz 0 1 : Initial value 1 X : Widens by 10 Hz
3	Line current detection	0: No 1: Yes
4 | 6	2nd dial tone detection level (Z = 600 Ω)	No. 4 5 6 0 0 0 : -21 dBm 0 0 1 : -24 dBm 0 1 0 : -27 dBm 0 1 1 : -30 dBm 1 0 0 : -33 dBm 1 0 1 : -36 dBm 1 1 0 : -39 dBm 1 1 1 : -42 dBm
7	1st dial tone interrupt detecting time	0: 30 ms 1: 50 ms
8	Not used.	

NOTE: The WSW07 is not applicable in those countries where no dial tone or line current detection is supported, e.g., U.S.A.

- **Selectors 1 and 2: Frequency band range**

  These selectors set the frequency band for the 1st dial tone and the busy tone (before dialing) to be detected.

  This setting is effective only when selectors 1 through 3 of WSW05 are set to “1,1,1.”

- **Selector 3: Line current detection**

  This selector determines whether or not the equipment should detect a line current before starting dialing.

- **Selectors 4 through 6: 2nd dial tone detection level**

  These selectors set the detection level of the 2nd dial tone.

- **Selector 7: 1st dial tone interrupt detecting time**

  This selector sets the allowable time length of an interrupt which should not be interpreted as an interrupt in the 1st dial tone dialing.

WSW08 (Dial tone setting 2)

Selector No.	Function	Setting and Specifications
1 | 3	1st dial tone detection time length	No. 1 2 3 0 0 0 : 50 ms 0 0 1 : 210 ms 0 1 0 : 500 ms 0 1 1 : 800 ms 1 0 0 : 900 ms 1 0 1 : 1.5 sec. 1 1 0 : 2.0 sec. 1 1 1 : 2.5 sec.
4 5	Time-out length for 1st and 2nd dial tone detection	No. 4 5 0 0 : 10 sec. 0 1 : 20 sec. 1 0 : 15 sec. 1 1 : 30 sec.
6 | 8	Detection level of 1st dial tone and busy tone before dialing	No. 6 7 8 0 0 0 : -21 dBm 0 0 1 : -24 dBm 0 1 0 : -27 dBm 0 1 1 : -30 dBm 1 0 0 : -33 dBm 1 0 1 : -36 dBm 1 1 0 : -39 dBm 1 1 1 : -42 dBm

NOTE: The WSW08 is not applicable in those countries where no dial tone detection is supported, e.g., U.S.A.

- **Selectors 1 through 3: 1st dial tone detection time length**

  Upon detection of the 1st dial tone for the time length set by these selectors, the equipment starts dialing.

  This setting is effective only when selectors 1 through 3 of WSW05 are set to "1,1,1."

- **Selectors 4 and 5: Time-out length for 1st and 2nd dial tone detection**

  These selectors set the time-out length for the 1st and 2nd dial tone detection so that the equipment waits dial tone input for the specified time length and disconnects itself from the line when no dial tone is inputted.

WSW09 (Protocol definition 1)

Selector No.	Function	Setting and Specifications
1	Frame length selection	0: 256 octets 1: 64 octets
2	Use of non-standard commands	0: Allowed 1: Prohibited
3 4	No. of retries	No. 3 4 0 0 : 4 times 0 1 : 3 times 1 0 : 2 times 1 1 : 1 time
5	T5 timer	0: 300 sec. 1: 60 sec.
6	T1 timer	0: 35 sec. 1: 40 sec.
7 8	Elapsed time for time-out control for no response from the called station in automatic sending mode	No. 7 8 0 0 : 60 sec. 0 1 : 140 sec. (in the French versions) 70 sec. (in other versions) 1 0 : 90 sec. 1 1 : 35 sec.

NOTE: Selectors 1 through 5 are not applicable in those models which do not support ECM.

- **Selector 1: Frame length selection**

  Usually a single frame consists of 256 octets (1 octet = 8 bits). For communications lines with higher bit error rate, however, set selector 1 to "1" so that the facsimile equipment can divide a message into 64-octet frames.

  Remarks: The error correction mode (ECM) is a facsimile transmission manner in which the equipment divides a message into frames for transmission so that if any data error occurs on the transmission line, the equipment retransmits only those frames containing the error data.

- **Selector 2: Use of non-standard commands**

  If this selector is set to "0," the equipment may use non-standard commands (the machine's native-mode commands, e.g., NSF, NSC, and NSS) for communications. If it is set to "1," the equipment will use standard commands only.

- **Selectors 3 and 4: No. of retries**

  These selectors set the number of retries in each specified modem transmission speed.

- **Selector 5: T5 timer**

  This selector sets the time length for the T5 timer.

- **Selector 6: T1 timer**

  This selector sets the time length for the T1 timer.

- **Selectors 7 and 8: Elapsed time for time-out control**

  If the equipment receives no response (no G3 command) from the called terminal in automatic sending during the time set by these selectors, it disconnects the line.

WSW10 (Protocol definition 2)

Selector No.	Function	Setting and Specifications
1	Switching of DPS, following the CML ON/OFF	0: No 1: Yes
2	Time length from transmission of the last dial digit to CML ON	0: 100 ms 1: 50 ms
3	Time length from CML ON to CNG transmission	0: 2 sec. 1: 4 sec.
4	Time length from CML ON to CED transmission (except for facsimile-to-telephone switching)	0: 0.5 sec. 1: 2 sec.
5 6	No. of training retries	No. 5 6 0 0 : 1 time 0 1 : 2 times 1 0 : 3 times 1 1 : 4 times
7 8	Not used.	

- **Selector 1: Switching of DPS, following the CML ON/OFF**

  Setting this selector to "1" automatically switches DPS following the CML ON/OFF operation.

- **Selector 2: Time length from transmission of the last dial digit to CML ON**

  This selector sets the time length from when the equipment transmits the last dial digit until the CML relay comes on.

- **Selector 3: Time length from CML ON to CNG transmission**

  This selector sets the time length until the equipment transmits a CNG after it turns on the CML relay.

- **Selector 4: Time length from CML ON to CED transmission**

  This selector sets the time length until the equipment transmits a CED after it turns on the CML relay. This setting does not apply to switching between facsimile and telephone.

- **Selectors 5 and 6: No. of training retries**

  These selectors set the number of training retries to be repeated before automatic fallback.

WSW11 (Busy tone setting)

Selector No.	Function	Setting and Specifications
1 2	Frequency band range	No. 1 2 0 0 : Narrows by 10 Hz 0 1 : Initial value 1 x : Widens by 10 Hz
3	Not used.	
4	ON/OFF time length ranges (More than one setting allowed)	1: 400-600/400-600 ms
5		1: 175-440/175-440 ms
6		1: 700-800/700-800 ms
7		1: 110-410/320-550 ms
8		1: 100-660/100-660 ms

NOTE: WSW11 is not applicable in those countries where no busy tone detection is supported.

NOTE: The setting of WSW11 is effective only when selectors 5 and 6 of WSW05 are set to "0, 1" or "1, 1" (Busy tone detection).

- **Selectors 1 and 2: Frequency band range**

  These selectors set the frequency band for busy tone to be detected.

- **Selectors 4 through 8: ON/OFF time length ranges**

  These selectors set the ON and OFF time length ranges for busy tone to be detected. If more than one selector is set to "1," the ranges become wider. For example, if selectors 4 and 5 are set to "1," the ON and OFF time length ranges are from 175 to 600 ms.

WSW12 (Signal detection condition setting)

Selector No.	Function	Setting and Specifications
1 2	Min. OFF time length of calling signal (Ci)	No. 1 2 0 0 : 1500 ms 0 1 : 500 ms 1 0 : 700 ms 1 1 : 900 ms
3 4	Max. OFF time length of calling signal (Ci)	No. 3 4 0 0 : 6 sec. 0 1 : 7 sec. 1 0 : 9 sec. 1 1 : 11 sec.
5 6	Detecting time setting	No. 5 6 0 0 : 800 ms (1000 ms*) 0 1 : 200 ms 1 0 : 250 ms 1 1 : 150 ms
7	Delay	0: Yes 1: No
8	Not used.	

* 1000 ms in Chinese versions.

- **Selectors 1 through 4: Min. and max. OFF time length of calling signal (Ci)**

  If the equipment detects the OFF state of calling signal (Ci) for a time length which is greater than the value set by selectors 1 and 2 and less than the value set by selectors 3 and 4, it interprets the Ci signal as OFF.

- **Selectors 5 and 6: Detecting time setting**

  These selectors set the time length required to make the equipment acknowledge itself to be called. That is, if the equipment continuously detects calling signals with the frequency set by selectors 1 through 4 of WSW14 during the time length set by these selectors 5 and 6, it acknowledges the call.

- **Selector 7: Delay**

  Setting this selector to "0" allows the equipment to insert a 900 ms WAIT after acknowledgment of the call until the equipment turns on the CML relay to start receiving operation.

WSW13 (Modem setting)

Selector No.	Function	Setting and Specifications
1 2	Cable equalizer	No. 1 2 0 0 : 0 km 0 1 : 1.8 km 1 0 : 3.6 km 1 1 : 5.6 km
3 4	Reception level	No. 3 4 0 0 : -43 dBm 0 1 : -47 dBm 1 0 : -49 dBm 1 1 : -51 dBm
5 | 8	Modem attenuator	0: 0 dB 1: 8 dB 0: 0 dB 1: 4 dB 0: 0 dB 1: 2 dB 0: 0 dB 1: 1 dB

The modem should be adjusted according to the user's line conditions.

- **Selectors 1 and 2: Cable equalizer**

  These selectors are used to improve the pass-band characteristics of analogue signals on a line. (Attenuation in the high-band frequency is greater than in the low-band frequency.)

  Set these selectors according to the distance from the telephone switchboard to the facsimile equipment.

- **Selectors 3 and 4: Reception level**

  These selectors set the optimum receive signal level.

- **Selectors 5 through 8: Modem attenuator**

  These selectors are used to adjust the transmitting level of the modem when the reception level at the remote station is improper due to line loss. This function applies for G3 protocol signals.

  Setting two or more selectors to "1" produces addition of attenuation assigned to each selector.

  This setting will be limited if selector 8 of WSW23 is set to "0."

WSW14 (AUTO ANS facility setting)

Selector No.	Function	Setting and Specifications
1 2	Frequency band selection (Lower limit)	No. 1 2 0 0 : 13 Hz 0 1 : 15 Hz 1 0 : 23 Hz 1 1 : 20 Hz
3 4	Frequency band selection (Upper limit)	No. 3 4 0 0 : 30 Hz 0 1 : 55 Hz 1 X : 70 Hz
5 | 8	No. of rings in AUTO ANS mode	No. 5 6 7 8 0 0 0 0 : Fixed to once 0 0 0 1 : Fixed to 2 times 0 0 1 0 : Fixed to 3 times 0 0 1 1 : Fixed to 4 times 0 1 0 0 : 1 to 2 times 0 1 0 1 : 1 to 3 times 0 1 1 0 : 1 to 4 times 0 1 1 1 : 1 to 5 times 1 0 0 0 : 2 to 3 times 1 0 0 1 : 2 to 4 times 1 0 1 0 : 2 to 5 times 1 0 1 1 : 2 to 6 times 1 1 0 0 : 1 to 10 times 1 1 0 1 : 2 to 10 times 1 1 1 0 : 3 to 5 times 1 1 1 1 : 4 to 10 times

- **Selectors 1 through 4: Frequency band selection**

  These selectors are used to select the frequency band of calling signals for activating the AUTO ANS facility.

  In the French versions, if the user sets the PBX to OFF from the control panel, the setting made by selectors 1 and 2 will take no effect and the frequency's lower limit will be fixed to 32 Hz. (Even if the setting made by these selectors does not apply, it will be printed on the configuration list.)

- Selectors 5 through 8: No. of rings in AUTO ANS mode

  These selectors set the number of rings to initiate the AUTO ANS facility.

WSW15 (REDIAL facility setting)

Selector No.	Function	Setting and Specifications
1 2	Selection of redial interval	No. 1 2 0 0 : 5 minutes 0 1 : 1 minute 1 0 : 2 minutes 1 1 : 3 minutes
3 | 6	No. of redialings	No. 3 4 5 6 0 0 0 0 : 16 times 0 0 0 1 : 1 times 0 0 1 0 : 2 times 0 0 1 1 : 3 times | 1 1 1 1 : 15 times
7	Redialing for no response sent from the called terminal	0: Redialing 1: No redialing
8	Not used.	

- **Selectors 1 through 6: Selection of redial interval and No. of redialings**

  The equipment redials by the number of times set by selectors 3 through 6 at intervals set by selectors 1 and 2.

- **Selectors 7: Redialing for no response sent from the called terminal**

  This selector determines whether or not the equipment redials if no G3 command response comes from the called station after dialing within the time length set by selectors 7 and 8 of WSW09.

WSW16 (Function setting 1)

Selector No.	Function	Setting and Specifications
1	Not used.	
2	CCITT superfine recommendation	0: OFF 1: ON
3 | 6	Not used.	
7	Max. document length limitation	0: 400 cm 1: 90 cm
8	**Stop** key pressed during reception	0: Not functional 1: Functional

- **Selector 2: CCITT superfine recommendation**

  If this selector is set to "1," the equipment communicates in CCITT recommended superfine mode (15.4 lines/mm). If it is set to "0," it communicates in native superfine mode.

- **Selector 7: Max. document length limitation**

  This selector is used to select the maximum length of a document to be sent.

- **Selector 8: Stop key pressed during reception**

  If this selector is set to "1," pressing the **Stop** key can stop the current receiving operation. The received data will be lost.

WSW17 (Function setting 2)

Selector No.	Function	Setting and Specifications
1 2	Off-hook alarm	No. 1 2 0 0 : No alarm 0 1 : Always valid 1 X : Valid except when 'call reservation' is selected.
3	Power failure report output	0: ON 1: OFF
4	Calendar clock/prompt alternate display	0: NO 1: YES
5	Calendar clock type	0: U.S.A. type 1: European type
6	Error indication in activity report	0: NO 1: YES
7	Non-ring reception	0: OFF 1: ON
8	Not used.	

NOTE: Selector 3 is not applicable to the U.S.A. versions.

- **Selectors 1 and 2: Off-hook alarm**

  These selectors activate or deactivate the alarm function which sounds an alarm when the communication is completed with the handset being off the hook.

- **Selector 3: Power failure report output**

  This selector determines whether or not the equipment outputs a power failure report when the power comes back on.

- **Selector 4: Calendar clock/prompt alternate display**

  If this selector is set to "1," the calendar clock and the prompt "INSERT DOCUMENT" appear alternately on the LCD while the equipment is on standby; if it is set to "0," only the calendar clock appears.

- **Selector 5: Calendar clock type**

  If this selector is set to "0" (USA), the MM/DD/YY hh:mm format applies; if it is set to "1" (Europe), the DD/MM/YY hh:mm format applies: DD is the day, MM is the month, YY is the last two digits of the year, hh is the hour, and mm is the minute.

- **Selector 6: Error indication in activity report**

  This selector determines whether or not a communications error code will be printed in the activity report.

- **Selector 7: Non-ring reception**

  Setting this selector to "1" makes the equipment receive calls without ringer sound if the ring delay is set to 0.

WSW18 (Function setting 3)

Selector No.	Function	Setting and Specifications
1	Not used.	
2 3	Detection enabled time for CNG and no tone	No. 2 3 0 0 : 40 sec. 0 1 : 0 sec. (No detection) 1 0 : 5 sec. 1 1 : 80 sec.
4 5	Not used.	
6	Registration of station ID	0: Permitted 1: Prohibited
7 8	Tone sound monitoring	No. 7 8 0 X : No monitoring 1 0 : Up to phase B at the calling station only 1 1 : All transmission phases both at the calling and called stations

- **Selectors 2 and 3: Detection enabled time for CNG and no tone**

  After the line is connected via the external telephone or by picking up the handset of the facsimile equipment, the equipment can detect a CNG signal or no tone for the time length specified by these selectors. The setting specified by these selectors becomes effective only when selector 8 of WSW20 is set to "1."

- **Selector 6: Registration of station ID**

  Setting this selector to "0" permits the registration of station ID for Austrian and Czech versions.

- **Selectors 7 and 8: Tone sound monitoring**

  These selectors set monitoring specifications of the tone sound inputted from the line.

WSW19 (Transmission speed setting)

Selector No.	Function	Setting and Specifications
1 | 3	First transmission speed choice for fallback	No. 1 2 3 No. 4 5 6 0 0 0 : 2,400 bps 0 0 1 : 4,800 bps 0 1 0 : 7,200 bps 0 1 1 : 9,600 bps 1 0 0 : 12,000 bps * 1 0 1 : 1 1 0 : 14,400 bps * 1 1 1 :
4 | 6	Last transmission speed choice for fallback	
7	Not used.	
8	V. 17 mode	0: Permitted 1: Prohibited

- In those models with a maximum of 9600 bps capability, selection of 12,000 bps or 14,400 bps will still only produce a set speed automatically reduced to 9600 bps.

NOTE: Selector 8 is applicable only to those models that support 14,400 bps.

Selectors 1 through 6: First and last choices of transmission speed for fallback

These selectors are used to set the MODEM speed range. With the first transmission speed choice specified by selectors 1 through 3, the equipment attempts to synchronize the data transmission via the MODEM. If the synchronization fails, the equipment automatically steps down to the next lowest speed and attempts to synchronize the data transmission again. The equipment repeats this sequence while stepping down the transmission speed to the last choice specified by selectors 4 through 6.

If the MODEM always falls back to a low transmission speed (e.g., 4,800 bps), set the first transmission speed choice to the lower one (e.g., modify it from 12,000 bps to 7,200 bps) in order to deactivate the high-speed MODEM function and reduce the training time for shorter transmission time.

Generally, to save the transmission time, set the last transmission speed choice to a higher one.

WSW20 (Overseas communications mode setting)

Selector No.	Function	Setting and Specifications
1	EP* tone prefix	0: OFF 1: ON
2	Overseas communications mode (Reception)	0: 2100 Hz 1: 1100 Hz
3	Overseas communications mode (Transmission)	0: OFF 1: Ignores DIS once.
4 5	Min. time length from reception of CFR to start of transmission of video signals	No. 4 5 0 0 : 100 ms 0 1 : 200 ms 1 0 : 300 ms 1 1 : 400 ms
6 7	Chattering elimination for CNG detection	No. 6 7 0 0 : A (During CNG ON and OFF) 0 1 : B (During CNG OFF only) 1 X : C (No elimination)
8	CNG detection on/off	0: OFF 1: ON

* EP: Echo protection

- **Selector 1: EP tone prefix**

  Setting this selector to "1" makes the equipment transmit a 1700 Hz echo protection (EP) tone immediately preceding training in V.29 modulation system to prevent omission of training signals.

  Prefixing an EP tone is effective when the equipment fails to transmit at the V.29 modem speed and always has to fall back to 4800 bps transmission.

- **Selectors 2 and 3: Overseas communications mode**

  These selectors should be used if the facsimile equipment malfunctions in overseas communications. According to the communications error state, select the signal specifications.

  Setting selector 2 to "1" allows the equipment to use 1100 Hz CED signal instead of 2100 Hz in receiving operation. This prevents malfunctions resulting from echoes, since the 1100 Hz signal does not disable the echo suppressor (ES) while the 2100 Hz signal does.

  Setting selector 3 to "1" allows the equipment to ignore a DIS signal sent from the called station once in sending operation. This operation suppresses echoes since the first DIS signal immediately follows a 2100 Hz CED (which disables the ES) so that it is likely to be affected by echoes in the disabled ES state. However, such a disabled ES state will be removed soon so that the second and the following DIS signals are not susceptible to data distortion due to echoes. Note that some models when called may cause error by receiving a self-outputted DIS.

- **Selectors 8: CNG detection on/off**

  If this selector is set to “1,” the equipment detects a CNG signal according to the condition preset by selectors 2 and 3 of WSW18 after a line is connected. If it is set to “0,” the equipment detects a CNG signal as long as the line is connected.

WSW21 (TAD setting 1)

Selector No.	Function	Setting and Specifications
1 | 5	Max. waiting time for voice signal	No. 1 2 3 4 5 0 0 0 0 0 : No detection 0 0 0 0 1 : 1 sec. 0 0 0 1 0 : 2 sec. 0 0 0 1 1 : 3 sec. | | 0 1 0 0 0 : 8 sec. | | 1 1 1 1 1 : 31 sec.
6 7	Two-way recording	No. 6 7 0 0 : For U.S.A. (A) 0 1 : Except for U.S.A. (B) 1 0 : Without beep (C) 1 1 : OFF (D)
8	Erasure of message stored in the memory after the message transfer	0: Yes 1: No

NOTE: Selectors 1 through 8 are applicable to those models equipped with a built-in TAD.

- **Selectors 1 through 5: Max. waiting time for voice signal**

  In the TAD mode, the equipment waits for voice signal for the time length specified by these selectors before it automatically shifts to the facsimile message receive mode or disconnects the line.

- **Selectors 6 and 7: Two-way recording**

  These selectors select the specifications of the two-way recording feature.

- **Selector 8: Erasure of message**

  Setting this selector to "0" will erase the message recorded in the memory after the document retrieval feature transfers the message.

WSW22 (ECM and caller ID setting)

Selector No.	Function	Setting and Specifications
1	ECM* in sending	0: ON 1: OFF
2	ECM* in receiving	0: ON 1: OFF
3	Call Waiting Caller ID	0: ON 1: OFF
4	Not used.	
5 | 8	Acceptable TCF bit error rate (%) (Only at 4800 bps)	0: 0% 1: 8% 0: 0% 1: 4% 0: 0% 1: 2% 0: 0% 1: 1%

* ECM: Error correction mode

NOTE: Selector 3 is applicable to the U.S.A. versions only.

NOTE: Selectors 5 through 8 are applicable to the Chinese, Taiwanese and Asian versions only.

- **Selector 3: Call Waiting Caller ID**

  Setting this selector to "0" allows the user to decide whether or not to interrupt the current call when a new call comes in. If Call Waiting Caller ID service is available in the area and the user subscribes to it, he/she can see information about his/her incoming call.

- **Selectors 5 through 8: Acceptable TCF bit error rate (%)**

  Setting two or more selectors to "1" produces addition of percent assigned to each selector. If you set selectors 7 and 8 to "1," the acceptable TCF bit error rate will be 3%.

WSW23 (Communications setting)

Selector No.	Function	Setting and Specifications
1	Starting point of training check (TCF)	0: From the head of a series of zeros 1: From any arbitrary point
2 3	Allowable training error rate	No. 2 3 0 0 : 0% 0 1 : 0.5% 1 0 : 1% 1 1 : 2%
4 5	Decoding error rate for transmission of RTN	No. 4 5 0 0 : 16% 0 1 : 14% 1 0 : 10% 1 1 : 8%
6	Issue of RTN at the occurrence of a pagination error	0: YES 1: NO
7	Not used.	
8	Limitation of attenuation level	0: YES 1: NO

NOTE: Selector 8 is not applicable to the French and Chinese versions.

- **Selector 1: Starting point of training check (TCF)**

  At the training phase of receiving operation, the called station detects for 1.0 second a training check (TCF) command, a series of zeros which is sent from the calling station for 1.5 seconds to verify training and give the first indication of the acceptability of the line.

  This selector sets the starting point from which the called station should start counting those zeros. If this selector is set to "0," the called station starts counting zeros 100 ms after the head of a series of zeros is detected.

  If it is set to "1," the called station starts counting zeros upon detection of 10-ms successive zeros 50 ms after the head of a series of zeros is detected. In this case, if the detection of 10-ms successive zeros is too late, the data counting period will become less than 1.0 second, making the called station judge the line condition unacceptable.

- **Selectors 2 and 3: Allowable training error rate**

  The called station checks a series of zeros gathered in training (as described in Selector 1) according to the allowable training error rate set by these selectors. If the called station judges the line condition to be accepted, it responds with CFR; if not, it responds with FTT.

- **Selectors 4 and 5: Decoding error rate for transmission of RTN**

  The facsimile equipment checks the actual decoding errors and then transmits an RTN according to the decoding error rate (Number of lines containing an error per page ÷ Total number of lines per page) set by these selectors.

- **Selector 6: Issue of RTN at the occurrence of a pagination error**

  If this selector is set to "0," the facsimile equipment transmits an RTN when a pagination error occurs due to recording lag relative to receiving.

- **Selector 8: Limitation of attenuation level**

  Setting this selector to "0" limits the transmitting level of the modem to 10 dB.

  This setting has priority over the settings selected by WSW02 (selectors 5 through 8) and WSW13 (selectors 5 through 8).

WSW24 (TAD setting 2)

Selector No.	Function	Setting and Specifications
1 2	Maximum OGM recording time	No. 1 2 0 0 : 15 sec. 0 1 : 20 sec. 1 0 : 30 sec. 1 1 : 50 sec.
3 4	Time length from CML ON to start of pseudo ring backtone transmission	No. 3 4 0 0 : 4 sec. 0 1 : 3 sec. 1 0 : 2 sec. 1 1 : 1 sec.
5 | 8	Attenuator for playback of ICM/ OGM to the line (Selectable from the range of 0-15 dB)	0: 0 dB 1: 8 dB 0: 0 dB 1: 4 dB 0: 0 dB 1: 2 dB 0: 0 dB 1: 1 dB

NOTE: Selectors 1 and 2 are applicable to those models equipped with a built-in TAD.

- **Selectors 1 and 2: Maximum OGM recording time**

  These selectors set the allowable maximum recording time for an OGM.

- **Selectors 3 and 4: Time length from CML ON to start of pseudo ring backtone transmission**

  These selectors set the length of time from CML-ON up to the start of pseudo ring backtone transmission.

  In those versions which have an OGM facility, the settings made by these selectors also apply to the length of time from CML-ON up to the start of OGM transmission.

- **Selectors 5 through 8: Attenuator for playback of ICM/OGM to the line**

  Setting two or more selectors to "1" produces addition of attenuation assigned to each selector.

  This setting will not be limited by selector 8 of WSW23.

WSW25 (TAD setting 3)

Selector No.	Function	Setting and Specifications
1 | 4	Not used.	
5 | 7	Pause between paging number and PIN	No. 5 6 7 0 0 0 : 2 sec. 0 0 1 : 4 sec. 0 1 0 : 6 sec. 0 1 1 : 8 sec. 1 0 0 : 10 sec. 1 0 1 : 12 sec. 1 1 0 : 14 sec. 1 1 1 : 16 sec.
8	Not used.	

NOTE: Selectors 5 through 7 are applicable to the U.S.A. and Canadian versions of the FAX770/ FAX870MC/MFC970MC.

- **Selectors 5 through 7: Pause between paging number and PIN**

  These selectors set the pause time between a telephone number being paged and PIN (private identification number) for the paging feature.

WSW26 (Function setting 4)

Selector No.	Function	Setting and Specifications
1	Application of DC wetting pulse	0: OFF 1: ON
2	Overvoltage limiter at the applying time of a wetting pulse	0: ON 1: OFF
3	Not used.	
4 5	No. of CNG cycles to be detected (when the line is connected via the external telephone except in the external TAD mode)	No. 4 5 0 0 : 0.5 (A) 0 1 : 1 (B) 1 0 : 1.5 (C) 1 1 : 2 (D)
6 7	No. of CNG cycles to be detected (when the line is connected via the external telephone in the external TAD mode or via the facsimile equipment in F/T mode)	No. 6 7 0 0 : 0.5 (A) 0 1 : 1 (B) 1 0 : 1.5 (C) 1 1 : 2 (D)
8	FAX reception after the time-out of pseudo ring backtones in F/T mode	0: YES 1: NO

NOTE: Selectors 6 and 7 are not applicable to those models equipped with a built-in TAD.

- **Selectors 1 and 2: Application of DC wetting pulse and overvoltage limiter**

  These selectors take effect only when the UK version of the facsimile equipment is set up for the British Telecom's caller ID service or its equivalent.

  Selector 2 takes effect only when selector 1 is set to "1."

- **Selectors 4 and 5: No. of CNG cycles to be detected**

  The equipment interprets a CNG as an effective signal if it detects a CNG signal by the number of cycles specified by these selectors when the line is connected via the external telephone except in the external TAD mode.

- **Selectors 6 and 7: No. of CNG cycles to be detected**

  The equipment interprets a CNG as an effective signal if it detects a CNG signal by the number of cycles specified by these selectors when the line is connected via the external telephone in the external TAD mode or via the facsimile equipment in F/T mode.

- **Selector 8: FAX reception after the time-out of pseudo ring backtones in F/T mode**

  If this selector is set to "0," the equipment starts receiving FAX messages when it receives a CNG signal within 10-second no-tone period provided after the time-out of pseudo ring backtones. If no CNG is received within the period, the equipment disconnects the line.

  If this selector is set to "1," the equipment disconnects the line after issuing pseudo ring backtones.

WSW27 (Function setting 5)

Selector No.	Function	Setting and Specifications
1	Definition of programmable key	0: TEL key 1: TEL/POLLING key
2	Ringer OFF setting	0: Yes 1: No
3	Automatic playback of OGM at the start time of OGM ON mode	0: No 1: Yes
4	Detection of distinctive ringing pattern	0: Yes 1: No
5 | 8	Not used.	

NOTE: Selector 1 is not applicable to the U.S.A. versions.

NOTE: Selector 3 is applicable to those models equipped with a built-in TAD.

- **Selector 1: Definition of programmable key**

  This selector defines a programmable key as a TEL key or TEL/POLLING key.

  Setting this selector to "1" allows the programmable key to function as either a TEL or POLLING key if pressed when the handset is off or on the hook, respectively.

  This setting is effective only for those models having a programmable key.

- **Selector 2: Ringer OFF setting**

  This selector determines whether or not the ringer can be set to OFF.

- **Selector 3: Automatic playback of OGM at the start time of OGM ON mode**

  This selector determines whether or not the equipment automatically plays back an OGM the moment it switches to the OGM ON mode in the MC mode.

- **Selector 4: Detection of distinctive ringing pattern**

  If this selector is set to "1," the equipment detects only the number of rings; if it is set to "0," the equipment detects the number of rings and the ringing time length to compare the detected ringing pattern with the registered distinctive one.

WSW28 (Function setting 6)

Selector No.	Function	Setting and Specifications
1 | 3	Transmission level of DTMF high-band frequency signal	No. 1 2 3 0 0 0 : 0 dB 0 0 1 : +1 dB 0 1 0 : +2 dB 0 1 1 : +3 dB 1 0 0 : 0 dB 1 0 1 : -1 dB 1 1 0 : -2 dB 1 1 1 : -3 dB
4 | 6	Transmission level of DTMF low-band frequency signal	No. 4 5 6 0 0 0 : 0 dB 0 0 1 : +1 dB 0 1 0 : +2 dB 0 1 1 : +3 dB 1 0 0 : 0 dB 1 0 1 : -1 dB 1 1 0 : -2 dB 1 1 1 : -3 dB
7 8	Not used.	

Selectors 1 through 6: Transmission level of DTMF high-/low-band frequency signal

These selectors are intended for the manufacturer who tests the equipment for the Standard. Never access them.

WSW29 (Function setting 7)

Selector No.	Function	Setting and Specifications
1 | 3	Compression threshold level for voice signals inputted via the telephone line in the built-in TAD operation	No. 1 2 3 0 0 0 : -47.0 dBm (A) 0 0 1 : -48.5 dBm (B) 0 1 0 : -50.0 dBm (C) 0 1 1 : -51.5 dBm (D) 1 0 0 : -53.0 dBm (E) 1 0 1 : -54.5 dBm (F) 1 1 0 : -56.0 dBm (G) 1 1 1 : OFF (H)
4 | 6	Compression threshold level for voice signals inputted via the handset in the built-in TAD operation	No. 4 5 6 0 0 0 : -44.0 dBm (A) 0 0 1 : -45.5 dBm (B) 0 1 0 : -47.0 dBm (C) 0 1 1 : -48.5 dBm (D) 1 0 0 : -50.0 dBm (E) 1 0 1 : -51.5 dBm (F) 1 1 0 : -53.0 dBm (G) 1 1 1 : OFF (H)
7	Automatic dialing by caller IDs stored in the memory	0: Yes 1: No
8	Prompt beep for activity report	0: No 1: Yes

NOTE: Selectors 1 through 6 are applicable to those models equipped with a built-in TAD.

NOTE: Selector 8 is not applicable to the U.S.A. versions.

- **Selectors 1 through 6: Compression threshold level for voice signals inputted via the telephone line in the built-in TAD operation**

  If voice signals inputted via the telephone line are below the level specified by these selectors, the TAD interprets those received voice signals as no signal, compressing the recording time.

- **Selector 7: Automatic dialing by caller IDs stored in the memory**

  This selector determines whether or not the automatic dialing function by caller IDs stored in the memory (see the Note below) can be accessed.

  If it is set to "0," caller IDs stored in the memory can be called up on the LCD by the user function 6-7 and then pressing the **Start** key when the desired caller ID is displayed dials the caller automatically.

  (Note: The equipment can store a maximum of the latest 30 incoming caller IDs together with the reception date and time in the memory.)

- **Selector 8: Prompt beep for activity report**

  This selector determines whether or not the equipment will beep if the activity report memory area becomes full with 30 records, for prompting you to print out the report. (Printing it out will clear the memory area.)

WSW30 (Function setting 8)

Selector No.	Function	Setting and Specifications
1 | 3	Detection level of dial tone or busy tone for the built-in TAD operation	No. 1 2 3 0 0 0 : -38.0 dBm (A) 0 0 1 : -39.5 dBm (B) 0 1 0 : -41.0 dBm (C) 0 1 1 : -42.5 dBm (D) 1 0 0 : -44.0 dBm (E) 1 0 1 : -45.5 dBm (F) 1 1 0 : -47.0 dBm (G) 1 1 1 : -48.5 dBm (H)
4 | 6	Not used.	
7 8	Recording intensity control	No. 7 8 0 0 : A 0 1 : B 1 0 : C 1 1 : D

NOTE: Selectors 1 through 3 are applicable to those models equipped with a built-in TAD.

- **Selectors 1 through 3: Detection level of dial tone or busy tone for built-in TAD operation**

  If dial tone or busy tone inputted during ICM recording is below the level specified by these selectors, the TAD stops recording and disconnects the line.

- **Selectors 7 and 8 Recording intensity control**

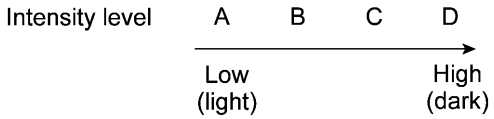

WSW31 (Function setting 9)

Selector No.	Function	Setting and Specifications
1	Not used.	
2	Default reduction rate for failure of automatic reduction during recording	0: 100% 1: 50%
3 4	Not used.	
5	Minimum short-OFF duration in distinctive ringing	0: 130 ms 1: 90 ms
6 | 8	Not used.	

NOTE: Selector 5 is applicable in those areas where the distinctive ringing is supported.

- **Selector 2: Default reduction rate for failure of automatic reduction during recording**

  This selector sets the default reduction rate to be applied if the automatic reduction function fails to record one-page data sent from the calling station in a single page of the current recording paper.

  If it is set to “0,” the equipment records one-page data at full size (100%) without reduction; if it is set to “1,” the equipment records it at half size (50%).

- **Selector 5 Minimum short-OFF duration in distinctive ringing**

  The ringer pattern consists of short and long rings, e.g., short-short-long rings. This selector sets the minimum OFF duration following a short ring in order to avoid missing ringer tones in distinctive ringing.

  If this selector is set to “1,” when the short-OFF duration is a minimum of 90 ms long, then the equipment will interpret the short-OFF as OFF.

WSW32 (Function setting 10)

Selector No.	Function	Setting and Specifications
1 | 4	Not used.	
5 6	Default resolution	No. 5 6 0 0 : Standard 0 1 : Fine 1 0 : Super fine 1 1 : Photo
7 8	Default contrast	No. 7 8 0 X : Automatic 1 0 : Super light 1 1 : Super dark

- **Selectors 5 and 6 Default resolution**

  These selectors set the default resolution which applies when the equipment is powered up or completes a transaction.

- **Selectors 7 and 8 Default contrast**

  These selectors set the default contrast which applies when the equipment is powered up or completes a transaction.

WSW33 (Function setting 11)

Selector No.	Function	Setting and Specifications
1 | 3	Detection threshold level for voice signals inputted via the telephone line in the built-in TAD operation	No. 1 2 3 0 0 0 : -42.5 dBm (A) 0 0 1 : -44.0 dBm (B) 0 1 0 : -45.5 dBm (C) 0 1 1 : -47.0 dBm (D) 1 0 0 : -48.5 dBm (E) 1 0 1 : -50.0 dBm (F) 1 1 0 : -51.5 dBm (G) 1 1 1 : -53.0 dBm (H)
4 5	FAX receiving speed to be kept within the transmission speed limit to the PC	No. 4 5 0 0 : 14,400 bps 0 1 : 12,000 bps 1 0 : 9,600 bps 1 1 : 7,200 bps
6	Report output of polled transmission requests	0: Yes 1: No
7 8	Comfortable noise level	No. 7 8 0 0 : OFF 0 1 : Low (A) 1 0 : Medium (B) 1 1 : High (C)

NOTE: Selectors 1 through 3 and 6 through 8 are applicable to those models equipped with a built-in TAD.

NOTE: Selector 6 is not applicable to the U.S.A. versions.

- **Selectors 1 through 3: Detection threshold level for voice signals inputted via the telephone line in the built-in TAD operation**

  If the equipment detects voice signals exceeding the threshold level set by these selectors, it will interpret them as effective voice.

- **Selectors 4 and 5: FAX receiving speed to be kept within the transmission speed limit to the PC**

  To transmit FAX data being received from other facsimile equipment to the connected PC, you may need to keep the FAX receiving speed within the transmission speed limit to the PC. In an initial negotiation sequence for transmission, the equipment responds to the calling station with the allowable FAX receiving speed specified by these selectors.

- **Selectors 7 and 8: Comfortable noise level**

  These selectors set the level of noise to be added during playing-back of voice signals recorded with no-signal compression.

  If they are set to "0, 0," no noise will be added.

WSW34 (Function setting 12)

Selector No.	Function	Setting and Specifications
1 | 3	Erasing time length of ICM tone recorded preceding the tone detection starting point in the case of automatic line disconnection due to no voice signal received	No. 1 2 3 0 0 0 : 0 sec. 0 0 1 : 1 sec. 0 1 0 : 2 sec. 0 1 1 : 3 sec. 1 0 0 : 4 sec. 1 0 1 : 5 sec. 1 1 0 : 6 sec. 1 1 1 : 7 sec.
4 5	No. of CNG cycles to be detected (when the line is connected via the external telephone in the external TAD mode or via the facsimile equipment in F/T or TAD mode)	No. 4 5 0 0 : 0.5 (A) 0 1 : 1 (B) 1 0 : 1.5 (C) 1 1 : 2 (D)
6 7	Number of DTMF tone signals for inhibiting the detection of CNG during external TAD operation	No. 6 7 0 0 : 3 0 1 : 2 1 0 : 1 1 1 : OFF
8	Not used.	

NOTE: Selectors 1 through 5 are applicable to those models equipped with a built-in TAD.

- **Selectors 1 through 3: Erasing time length of ICM tone recorded preceding the tone detection starting point in the case of automatic line disconnection due to no voice signal received**

  If the equipment has disconnected the line after detection of disconnection tone in ICM recording, it erases tone recorded preceding the tone detection starting point for the time length set by these selectors.

- **Selectors 4 and 5: No. of CNG cycles to be detected**

  The equipment interprets a CNG as an effective signal if it detects a CNG signal by the number of cycles specified by these selectors in any of the following cases:

  - when the line is connected via the external telephone in the external TAD mode.
  - when the line is connected via the facsimile equipment in F/T or TAD mode.

- **Selectors 6 and 7: Number of DTMF tone signals for inhibiting the detection of CNG during external TAD operation**

  If the equipment receives this specified number of DTMF tone signals during external TAD operation, it will not detect CNG afterwards.

  If these selectors are set to "1, 1," the CNG detection will not be inhibited.

WSW35 (Function setting 13)

Selector No.	Function	Setting and Specifications
1 | 4	Detection time length of the disconnection tone in ICM recording	No. 1 2 3 4 0 0 0 0 : No detection 0 0 0 1 : 1 sec. 0 0 1 0 : 2 sec. 0 1 0 0 : 4 sec. I I 1 1 1 1 : 15 sec.
5 | 8	Not used.	

NOTE: Selectors 1 through 4 are applicable to those models equipped with a built-in TAD.

- **Selectors 1 through 4: Detection time length of the disconnection tone in ICM recording**

  If the equipment detects disconnection tone for the time length set by these selectors, it will disconnect the line.

WSW36 (Function setting 14)

Selector No.	Function	Setting and Specifications
1 | 5	Not used.	
6 | 8	Lower limit of frequency to be ignored after detection of calling signals (Ci)	No. 6 7 8 0 0 0 : 0 (Not ignored) 0 0 1 : 4 (448 Hz) 0 1 0 : 8 (244 Hz) 0 1 1 : 12 (162 Hz) 1 0 0 : 16 (122 Hz) 1 0 1 : 20 (97 Hz) 1 1 0 : 24 (81 Hz) 1 1 1 : 28 (69 Hz)

- **Selectors 6 through 8: Lower limit of frequency to be ignored after detection of calling signals (Ci)**

  At the start of reception, if the equipment detects the frequency of calling signals (Ci) specified by selectors 1 through 4 of WSW14, it will start the ringer sounding. When doing so, the equipment may fail to detect the calling signals normally due to noises superimposed at the time of reception. To prevent it, use selectors 6 through 8 of WSW36.

  If the equipment detects higher frequencies than the lower limit specified by these selectors, it will regard them as noise and interpret that detecting state as being normal, allowing the ringer to keep sounding (until the equipment starts automatic reception of FAX data if in the FAX mode or enters the TAD mode if set in the TEL mode, according to the preset number of ringers).

[B] Printout of firmware switch data

n Function

The equipment prints out the setting items and contents specified by the firmware switches.

n Operating Procedure

(1) Press the **1** key twice in the initial stage of the maintenance mode.
The "PRINTING" will appear on the LCD.

(2) The equipment prints out the configuration list as shown in the figure below.

(3) Upon completion of printing, the equipment returns to the initial stage of the maintenance mode.

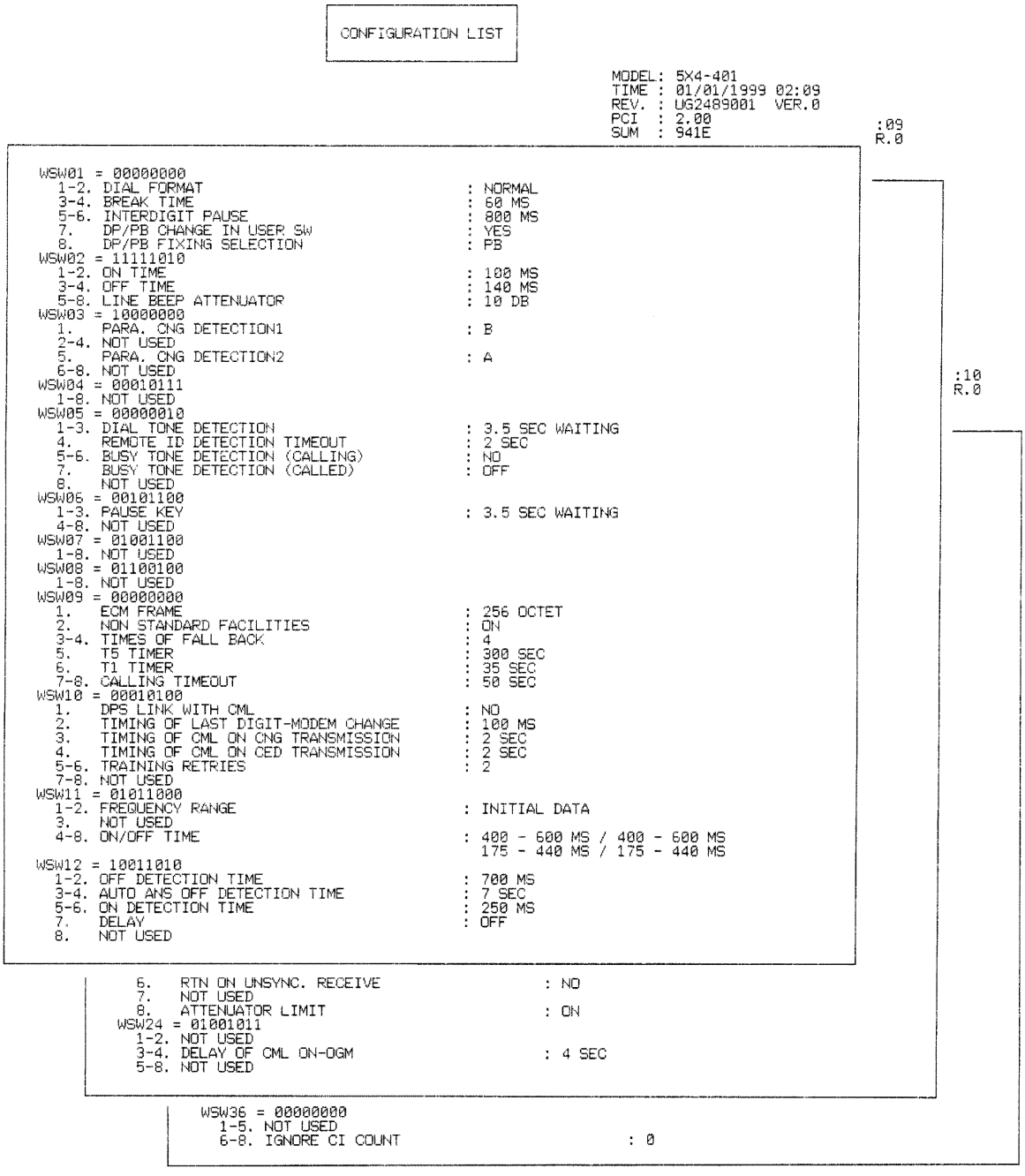

Configuration List

3.6 Operational Check of LCD

n Function

This function allows you to check whether the LCD on the control panel works normally.

n Operating Procedure

(1) Press the **1** and **2** keys in this order in the initial stage of the maintenance mode.

The LCD shows

(2) Press the **Start** key. Each time you press the **Start** key, the LCD cycles through the displays shown at right.

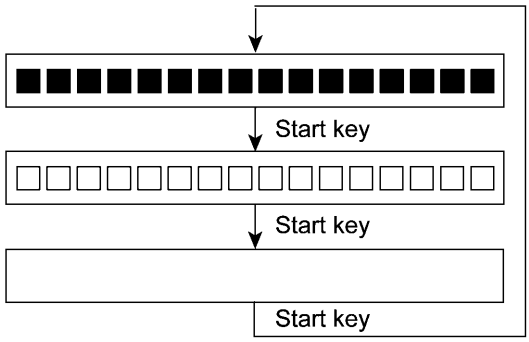

(3) Press the **Stop** key in any process of the above display cycle. The equipment beeps for one second and returns to the initial stage of the maintenance mode.

3.7 Operational Check of Control Panel PCB

n Function

This function allows you to check the control panel PCB for normal operation.

n Operating Procedure

(1) Press the **1** and **3** keys in this order in the initial stage of the maintenance mode.

The "00 " will appear on the LCD.

(2) Press the keys and buttons in the order designated in the illustration shown below.

The LCD shows the corresponding number in decimal notation each time a key or button is pressed. Check that the displayed number is correct by referring to the illustration below.

If a key or button is pressed out of order, the equipment beeps and displays the "INVALID OPERATE" on the LCD. To return to the status ready to accept key & button entry for operational check, press the **Stop** key.

(3) After the last number key or button is pressed, the equipment beeps and returns to the initial stage of the maintenance mode.

To terminate this operation, press the **Stop** key. The equipment returns to the initial stage of the maintenance mode.

FAX750/FAX770/FAX-910/FAX-920/FAX-921/MFC-925

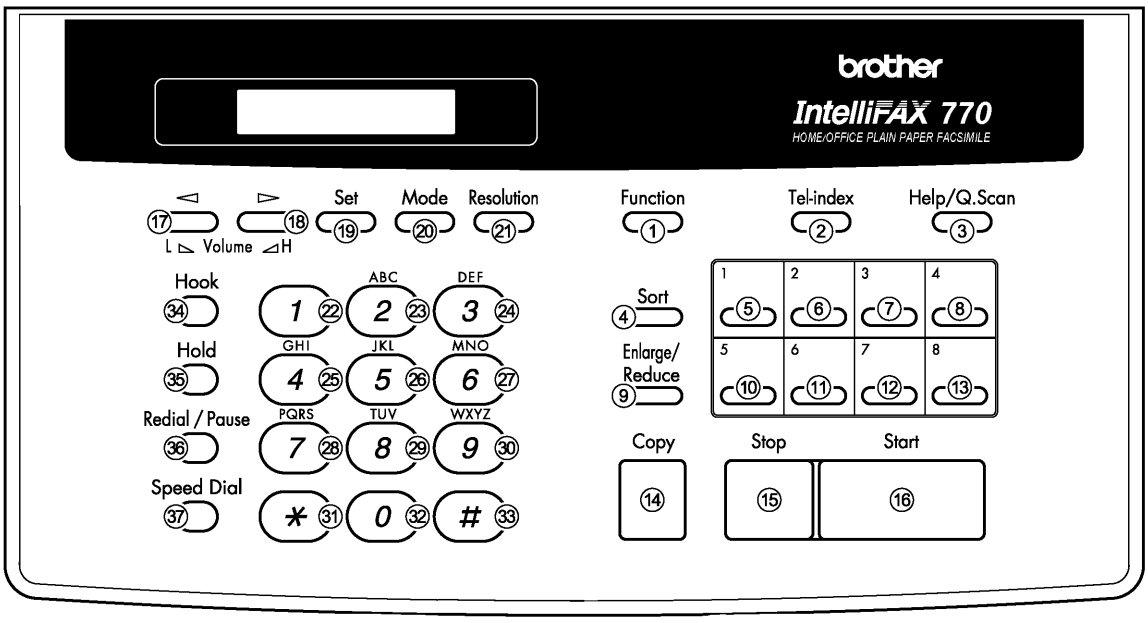

FAX870MC/FAX-930/FAX-931/MFC970MC

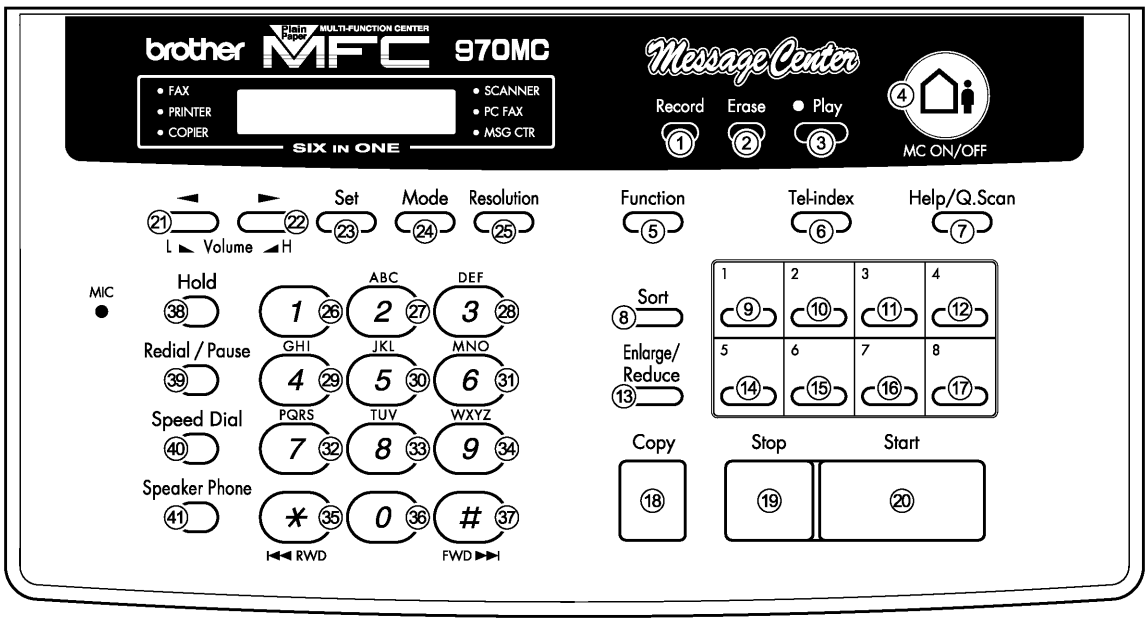

Key & Button Entry Order

3.8 Sensor Operational Check

n Function

This function allows you to check that the seven sensors (document front sensor, document rear sensor, cover sensor, paper ejection sensor, paper-edge sensor, ribbon sensor, and hook switch sensor*) operate correctly.

(*In the FAX-910, the hook switch sensor serves no function.)

n Operating Procedure

(1) Press the **3** and **2** keys in this order in the initial stage of the maintenance mode. The equipment sounds 1100 Hz and 400 Hz tones cyclically through the following volumes for testing the speaker.

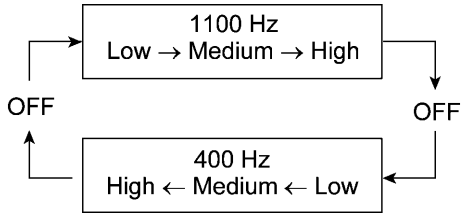

If the sensing status are as listed below, the LCD will show the following:

"FRERCJMPHRX 1" on the FAX-910

"FRERCJMPHRXHK 1" on other models

In this area a numeral appears, indicating the number of communications records printed out at the factory for testing.

Given below is the relationship between the LCD indication, sensor name and sensor status.

LCD	Sensors	Sensing status
FRE	Document front and rear sensors	No document detected.
RC	Cover sensor	Recording paper cover ASSY closed.
JM	Paper ejection sensor	No paper jam.
PH	Paper-edge sensor	Recording paper loaded or paper front cover opened.
RX	Ribbon sensor	Ribbon cartridge loaded.
HK	Hook switch sensor	On-hook state.

(2) Change the detecting conditions and check that the displayed letters disappear. For example, insert a document through the document front (or rear) sensor and check that the "F" (or "E") of the FRE disappears.

(3) To stop this operation, press the **Stop** key. The equipment beeps for one second and returns to the initial stage of the maintenance mode.

3.9 Fine Adjustment of Scanning Start/End Position

n Function

This function allows you to adjust the scanning start/end position.

n Operating Procedure

(1) Press the **5** and **4** keys in this order in the initial stage of the maintenance mode.

The LCD shows the current scanning position correction value as shown at right.

(2) Press the **Start** key. Each time you press the **Start** key, the LCD cycles through the displays shown at right.

That is, pressing this key cycles through the correction values (mm) as shown below.

0 → -1 → -2 → +1

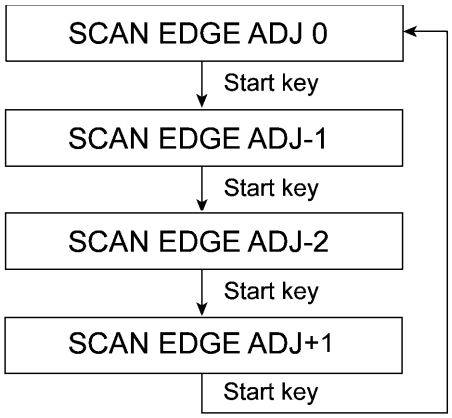

(3) To stop this operation, press the **Stop** key. The equipment beeps for one second and returns to the initial stage of the maintenance mode.

NOTE: The relationship between the scanning start/end positions and their correction values is shown below.

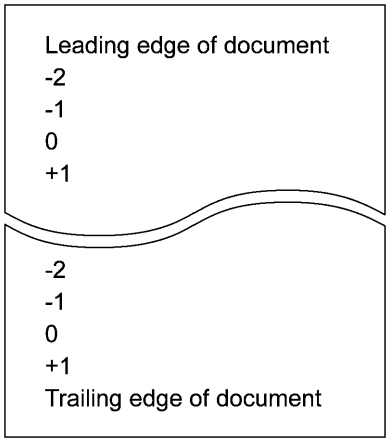

3.10 CIS Scanner Area Setting

n Function

The equipment sets the CIS scanner area and stores it into the EEPROM.

n Operating Procedure

(1) Press the **5** key twice in the initial stage of the maintenance mode.

The "SCANNER AREA SET" will appear on the LCD.

The equipment checks and sets the area to be scanned.

If no error is noted, the equipment returns to the initial stage of the maintenance mode.

If any error is noted, the "SCANNER ERROR" will appear on the LCD. To return the equipment to the initial stage of the maintenance mode, press the **Stop** key.

3.11 EEPROM Customizing

n Function

This function allows you to customize the EEPROM according to language, function settings, and firmware switch settings. The customizing codes list is given in Appendix 1.

NOTE: If you replace the main PCB, be sure to carry out this procedure.

n Operating Procedure

(1) Press the **7** and **4** keys in this order in the initial stage of the maintenance mode.

The current customizing code (e.g., 1101 in the case of FAX770 U.S.A. versions) appears.

(2) Enter the desired customizing code (e.g., 0102 in the case of FAX770 Canadian versions).

The newly entered code appears.

NOTE: *If a wrong 4-digit code is entered, the equipment will malfunction.*

(3) Press the **Start** key.

The equipment saves the setting and returns to the initial stage of the maintenance mode.

If you press the **Stop** key or no keys are pressed for one minute in the above procedure, the equipment stops the procedure and returns to the initial stage of the maintenance mode.

3.12 Equipment Error Code Indication

n Function

This function displays an error code of the last error on the LCD.

n Operating Procedure

(1) Press the **8** and **2** keys in this order in the initial stage of the maintenance mode.

The LCD shows the "MACHINE ERROR _ _" (for 2-digit error code indication) or "MACHINE ERR _ _ _ _" (for 4-digit error code indication).

(2) To stop this operation and return the equipment to the initial stage of the maintenance mode, press the **Stop** key.

3.13 Output of Transmission Log to the Telephone Line

n Function

This function outputs the transmission log (that the equipment has stored about the latest transmission) to the telephone line. It allows the service personnel to receive the transmission log of the user's equipment at a remote location and use it for analyzing problems arising in the user's equipment.

n Operating Procedure

(1) If the user's equipment has a transmission-related problem, call the user's equipment at a remote location from your equipment.

(2) If the line is connected, have the user perform the following:

1) For FAX750/FAX770/FAX870MC/MFC970MC: Press the **Function**, **Mode**, and **0** keys in this order.

For FAX-910/FAX-920/FAX-921/FAX-930/FAX-931/MFC-925: Press the **Menu**, **Mode**, and **0** keys in this order.

2) Press the **8** and **7** keys.

The above operation makes the user's equipment send CNG to your equipment for sending the transmission log.

(3) If you hear the CNG sent from the user's equipment, press the **Start** key of your equipment.

Your equipment will start to receive the transmission log from the user's equipment.

3.14 Document Draw Adjustment

After replacement of the main PCB or CIS, or if data stored in the EEPROM is damaged, you need to carry out this procedure by using the TC-027 chart.

n Function

This function adjusts how much the document is drawn in, starting at the point when the document rear sensor is turned on until the leading edge of the document reaches the scanning start position.

n Operating Procedure

(1) In the initial stage of the maintenance mode, set the TC-027 chart on the document stacker.

The message "DOC. READY" appears on the LCD.

(2) For FAX750/FAX770/FAX870MC/MFC970MC: Press the **Function** key.

For FAX-910/FAX-920/FAX-921/FAX-930/FAX-931/MFC-925: Press the **Menu** key.

The equipment beeps and draws in the TC-027 chart to the scanning start position. While drawing it in, the equipment counts patterns on the chart to determine the amount of draw.

Upon completion of normal counting, the equipment shows the message "COPY P.01 SUP" on the LCD and begins copying the TC-027 chart. The message "REAR SENSOR IS ADJUSTED." and the copied image will be printed out on recording paper as shown below.

If any error occurs during counting, the message "MACHINE ERROR AB" appears on the LCD, with no copying of the TC-027 chart onto the recording paper. However, only the message "REAR SENSOR IS ADJUSTED." will be printed out.

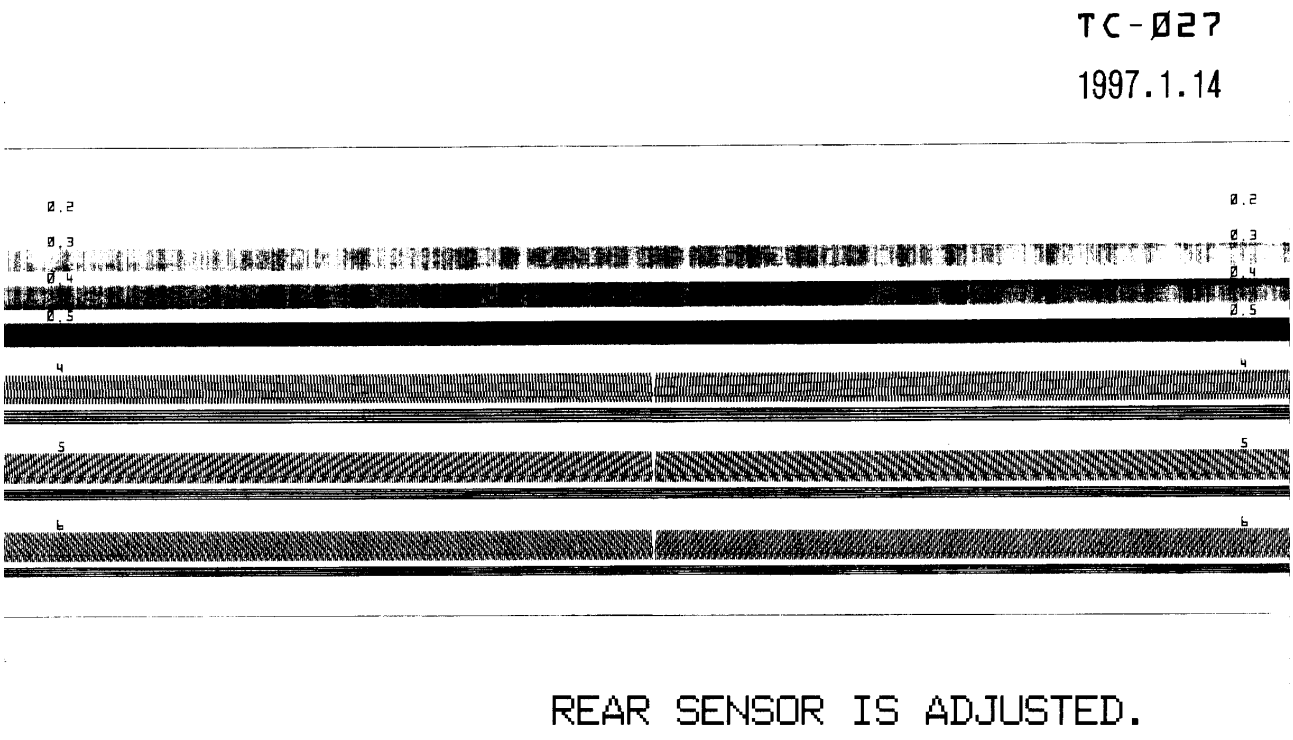

Printout after Normal Completion of Document Draw Adjustment

CHAPTER VI.

ERROR INDICATION AND TROUBLESHOOTING

CONTENTS

1. ERROR INDICATION ..... VI -1

1.1 Equipment Errors VI-1

[1] Error messages on the LCD VI-1

[2] Error codes shown in the "MACHINE ERROR _ _" message VI-3

1.2 Communications Errors VI-5

2. TROUBLESHOOTING VI-12

2.1 Introduction VI-12

2.2 Precautions VI-12

2.3 Checking prior to Troubleshooting VI-12

2.4 Troubleshooting Procedures VI-13

[1] Control panel related VI-13

[2] Telephone related VI-13

[3] Communications related VI-14

[4] Paper/document feeding related VI-14

[5] Print-image related VI-15

[6] Others VI-16

1. ERROR INDICATION

To help the user or the service personnel promptly locate the cause of a problem (if any), the facsimile equipment incorporates the self-diagnostic functions which display error messages for equipment errors and communications errors.

For the communications errors, the equipment also prints out the transmission verification report and the communications list.

1.1 Equipment Errors

If an equipment error occurs, the facsimile equipment emits an audible alarm (continuous beeping) for approximately 4 seconds and shows the error message on the LCD. For the error messages, see [1] below. As one of the error messages, "MACHINE ERROR _ _" includes an error code which indicates the detailed error causes listed in [2].

To display an error code for the other latest error message or detailed message, make the equipment enter the maintenance mode and press **8** and **2** keys (for details, refer to Chapter V, Section 3.12).

[1] Error messages on the LCD

Messages on the LCD	Probable Cause
CHECK PAPER (NOTE 1)	(1) The paper-edge sensor detects that no recording paper is present. (2) The paper ejection sensor detects that a paper jam has occurred .
TOP COVER OPEN	The cover sensor detects that the recording paper cover ASSY is not closed.
DOCUMENT JAM	n Document jam (1) The document length exceeds the limitation (400 or 90 cm) registered by firmware switch WSW16. (Refer to Chapter V, Section 3.5.) (Both the document front and rear sensors stay ON even after the document has been fed by the registered length.) (2) The document rear sensor detects no trailing edge of a document after the document has been fed by 400 cm. (The document rear sensor stays ON even after the document has been fed when the document front and rear sensors were OFF and ON, respectively.)

NOTE 1: If a recording paper feeding or ejecting error occurs *in the maintenance mode*, this "CHECK PAPER" message will not appear on the LCD but some 4-digit error code listed on page VI-4 will appear instead.

Messages on the LCD	Probable Cause
DOCUMENT JAM	n Document loading error (1) The document rear sensor detects no leading edge of a document within 10 seconds from the start of document loading operation. (The document rear sensor stays OFF even after the document has been fed when the document front sensor was ON.) (2) The loaded document is too short. (Since the document is shorter than the distance between the document front and rear sensors, the document front sensor is turned OFF before the document rear sensor is turned ON.)
CLEAN UP SCANNER	In the scanning compensation data list printed by the maintenance-mode function code 05, less than fifty percent of the white level data is faulty. (This message may appear only in the maintenance mode.)
SCANNER ERROR	In the scanning compensation data list printed by the maintenance-mode function code 05, fifty percent or more of the white level data is faulty. (This message may appear only in the maintenance mode.)
PRINTER FAULT	The thermistor in the recording head caused a heat error.
CHANGE CARTRIDGE	The ribbon sensor detects that no ink ribbon is loaded.
MACHINE ERROR _ _ or MACHINE ERR _ _ _ _	"_ _" indicates an error code. Refer to Section [2] on the following pages.
PC BUSY OR FAIL	After connected with the host computer, the equipment has received no response from the computer. (A communications error has occurred.)

If only an alarm beep is heard without any message on the LCD when the equipment is powered up, the ROM or RAM will be defective.

[2] Error codes shown in the "MACHINE ERROR _ _" message

Error Code (Hex.)	Error factor	
(85	Ink ribbon empty.)	
(87	Fails to complete the sequence of recording operation.)	
8A	Wrong or weak contact of the recording head connectors.	
(8B	Recording head overheat.)	
(A1	Recording paper cover opened.)	
(A2	Document too long to scan.)	
(A4	50% or more faulty of white level data.)	*
(A5	Faulty operation of DMA0 during scanning.)	
(A6	Faulty operation of DMA1 during scanning.)	
(A7	One-line feeding time-out error.)	
(A8	One-line scanning time-out error.)	
(AB	Document feed-in amount measuring error.)	*
(AC	Less than 50% faulty of white level data.)	*
(B9	Light emission intensity error of the LED array.)	
(BE	Abnormal clamp PWM value)	
(BF	Light emission intensity error of the LED array at the setting time of initial values.)	*
(D5	The MODEM fails to complete the command transmission sequence.)	
(D6	No MODEM interrupt for 60 seconds.)	
E6	Write error in EEPROM.	
(E8	Data scanning error during transmission.)	
F3	Voice message recording or playing-back not started.	
(F5	EOL not found in page memory transmission mode.)	
(F6	PC interface error.)	

Error codes in parentheses do not appear in the "MACHINE ERROR _ _," since those errors are displayed as messages described in "[1] Error messages on the LCD." You can display those error codes in the maintenance mode (Function code 82). If an equipment error occurs during communications, they appear in the communications error lists.

*These codes marked with an asterisk can appear only in the maintenance mode.

Error Code (Hex.)	Error factor
(82xx	Although recording paper has been fed by 150 mm after the start of recording, the paper-edge sensor is still OFF.)
(8303	Although recording paper has been fed by 360 mm after the start of recording, the paper-edge sensor is still ON.)
(8406	Although the trailing edge of recording paper has passed out of the platen and further fed for 100 mm, the paper ejection sensor is still ON.)
(8407	Within 10 mm of paper feeding from when the paper ejection sensor went OFF, the sensor has come ON again.
(840C	The paper ejection sensor is ON when you turn the power on or after you open and close the recording paper cover. If the paper-edge sensor is also ON, error code 880B appears.
(8809	Before the start of paper feeding, the paper-edge sensor is already ON.)
(880A	Although recording paper has been fed by 50 mm after the start of recording, the paper ejection sensor is still OFF.)
(880B	The paper-edge sensor is ON when you turn the power on or after you open and close the recording paper cover. If the paper ejection sensor is also ON, this error code appears.)
(A301	Even if a document is set, the document front sensor is OFF.)
(A302	Although a document has passed through the document front sensor, the document rear sensor is still OFF.)
(A303	When the document ejection operation has started, the document front sensor remains OFF.)
(A304	When the document ejection operation has started, the document rear sensor remains OFF.)
(A305	Although the CIS scanner area setting operation has been completed [Function code 55 in the maintenance mode], the document front sensor remains OFF.)
(A306	Although the CIS scanner area setting operation has been completed [Function code 55 in the maintenance mode], the document rear sensor remains OFF.)
(A307	In document scanning, the document rear sensor remains ON although the document has been fed by the specified amount after the document front sensor went OFF.)
(A308	In document ejecting caused by any of the following, the document rear sensor remains ON although the document has been fed by the specified amount after the document front sensor went OFF: - Depression of the **STOP** key in midway of scanning. - Illegal copying (Copying a document longer than the recording paper or making an enlargement copy larger than the recording paper). - Recovery operation from the error state (e.g., "DOCUMENT JAM" and "CHECK PAPER" error.)

NOTE: Four-digit error codes listed above are preceded by MACHINE ERR instead of MACHINE ERROR.

Error codes in parentheses do not appear in the "MACHINE ERR _ _ _ _," since those errors are displayed as messages described in "[1] Error messages on the LCD." You can display those error codes in the maintenance mode (Function code 82). If an equipment error occurs during communications, they appear in the communications error lists.

1.2 Communications Errors

If a communications error occurs, the facsimile equipment

① emits an audible alarm (intermittent beeping) for approximately 4 seconds,

② displays the corresponding error message, and

③ prints out the transmission verification report if the equipment is in sending operation.

n Definition of Error Codes on the Communications List

(1) Calling

Code 1	Code 2	Causes
10	08	Wrong number called.
11	01	No dial tone detected before start of dialing.
11	02	Busy tone detected before dialing.
11	03	2nd dial tone not detected.
11	05	No loop current detected.*
11	06	Busy tone detected after dialing or called.
11	07	No response from the remote station in sending.
11	10	No tone detected after dialing.
17	07	No response from the calling station in receiving.

* Available in Germany and Austria only.

(2) Command reception

Code 1	Code 2	Causes
20	01	Unable to detect a flag field.
20	02	Carrier was OFF for 200 ms or longer.
20	03	Abort detected ("1" in succession for 7 bits or more).
20	04	Overrun detected.
20	05	A frame for 3 seconds or more received.
20	06	CRC error in answerback.
20	07	Undefined command received.
20	08	Invalid command received.
20	09	Command ignored once for document setting or for dumping-out at turn-around transmission.
20	0A	T5 time-out error
20	0B	CRP received.
20	0C	EOR and NULL received.

(3) Compatibility [checking the NSF and DIS]

Code 1	Code 2	Causes
32	01	Remote terminal only with V.29 capability in 2400 or 4800 bps transmission.
32	02	Remote terminal not ready for polling.
32	10	Remote terminal not equipped with password function or its password switch OFF.
32	11	Remote terminal not equipped with or not ready for confidential mail box function.
32	12	Remote terminal not equipped with or not ready for relay broadcasting function.
32	13	No confidential mail in the remote terminal.
32	14	The available memory space of the remote terminal is less than that required for reception of the confidential or relay broad-casting instruction.

(4) Instructions received from the remote terminal [checking the NSC, DTC, NSS, and DCS]

Code 1	Code 2	Causes
40	02	Illegal coding system requested.
40	03	Illegal recording width requested.
40	05	ECM requested although not allowed.
40	06	Polled while not ready.
40	07	No document to send when polled.
40	10	Nation code or manufacturer code not coincident.
40	11	Unregistered group code entered for relay broadcasting function, or the specified number of broadcasting subscribers exceeding the limit.
40	12	Retrieval attempted when not ready for retrieval.
40	13	Polled by any other manufacturers' terminal while waiting for secure polling.
40	17	Invalid resolution selected.

(5) Command reception [checking the NSF and DIS after transmission of NSS and DCS]

Code 1	Code 2	Causes
50	01	Vertical resolution capability changed after compensation of background color.

(6) ID checking

Code 1	Code 2	Causes
63	01	Password plus "lower 4 digits of telephone number" not coincident.
63	02	Password not coincident.
63	03	Polling ID not coincident.
63	04	Entered confidential mail box ID uncoincident with the mail box ID.
63	05	Relay broadcasting ID not coincident.
63	06	Entered retrieval ID uncoincident with that of the mail box ID.

(7) DCN reception

Code 1	Code 2	Causes
74		DCN received.

(8) TCF transmission/reception

Code 1	Code 2	Causes
80	01	Fallback impossible.

(9) Signal isolation

Code 1	Code 2	Causes
90	01	Unable to detect video signals and commands within 6 seconds after CFR is transmitted.
90	02	Received PPS containing invalid page count or block count.

(10) Video signal reception

Code 1	Code 2	Causes
A0	03	Error correction sequence not terminated even at the final transmission speed for fallback.
A0	11	Receive buffer empty. (5-second time-out)
A0	12	Receive buffer full during operation except receiving into memory.
A0	13	Decoding error continued on 500 lines.
A0	14	Decoding error continued for 10 seconds.
A0	15	Time-out: 5 seconds or more for one-line transmission.
A0	16	RTC not found and carrier OFF signal detected for 6 seconds.
A0	17	RTC found but no command detected for 60 seconds.
A0	18	Receive buffer full during receiving into memory.
A8	01	RTN, PIN, or ERR received at the calling terminal.*
A9	01	RTN, PIN, or ERR received at the called terminal.*

* Available in Germany and Austria only

(11) General communications-related

Code 1	Code 2	Causes
B0	02	Unable to receive the next-page data.
B0	03	Unable to receive polling even during turn-around transmission due to call reservation.
B0	04	PC interface error.

(12) Maintenance mode

Code 1	Code 2	Causes
E0	01	Failed to detect 1300 Hz signal in burn-in operation.
E0	02	Failed to detect PB signals in burn-in operation.
E0	03	Failed to detect any command from the RS-232C interface in burn-in operation.

(13) Equipment error

Code 1	Code 2	Causes
FF	X X	Equipment error (For X X, refer to Subsection 1.1 [2].)

2. TROUBLESHOOTING

2.1 Introduction

This section gives the service personnel some of the troubleshooting procedures to be followed if an error or malfunction occurs with the facsimile equipment. It is impossible to anticipate all of the possible problems which may occur in future and determine the troubleshooting procedures, so this section covers some sample problems. However, those samples will help service personnel pinpoint and repair other defective elements if he/she analyzes and examines them well.

2.2 Precautions

Be sure to observe the following to prevent the secondary troubles from happening:

(1) Always unplug the AC power cord from the outlet when removing the covers and PCBs, adjusting the mechanisms, or conducting continuity testing with a circuit tester.

(2) When disconnecting the connectors, do not pull the lead wires but hold the connector housings.

(3)
- Before handling the PCBs, touch a metal portion of the machine to discharge static electricity charged in your body.
- When repairing the PCBs, handle them with extra care.

After repairing the defective section, be sure to check again if the repaired section works correctly. Also record the troubleshooting procedure so that it would be of use for future trouble occurrence.

2.3 Checking prior to Troubleshooting

Prior to proceeding to the troubleshooting procedures given in Subsection 2.4, check that :

(1) Each voltage level on AC input lines and DC lines is correct.

(2) All cables and harnesses are firmly connected.

(3) None of the fuses are blown.

2.4 Troubleshooting Procedures

[1] Control panel related

Trouble	Check:
(1) LCD shows nothing.	• Panel-main harness between the main PCB and the control PCB • Interfaces between the main PCB, NCU PCB and power supply PCB • LCD • Control panel PCB • Power supply PCB • Main PCB
(2) Control panel inoperative.	• Panel-main harness between the main PCB and the control PCB • Interfaces between the main PCB, NCU PCB and power supply PCB • Control panel PCB • FPC key • Main PCB

[2] Telephone related

Trouble	Check:
(1) No phone call can be made.	• FPC key • Control panel PCB by using the maintenance-mode function code 13. If any defective keys are found, replace them. (Refer to Chapter V, Section 3.7, "Operational Check of Control Panel PCB.") • NCU PCB • Main PCB
(2) Speed dialing or one-touch dialing will not work.	• Ordinary dialing function (other than the speed and one-touch dialing) If it works normally, check the main PCB; if not, refer to item (1) above.
(3) Speaker silent during on-hook dialing.	• Ordinary dialing function (Pick up the handset and press the numerical keys.) If it works normally, proceed to the following checks; if not, refer to item (1) above.
(4) Dial does not switch between tone and pulse.	• Main PCB
(5) Telephone does not ring.	• Speaker • NCU PCB • Main PCB

[3] Communications related

Trouble	Check:
(1) No tone is transmitted.	• Main PCB • NCU PCB

[4] Paper/document feeding related

Trouble	Check:
(1) Neither "COPY: PRESS COPY" nor "FAX: NO. & START" message appears although documents are set.	• Sensors by using the maintenance-mode function code 32. (Refer to Chapter V, Section 3.8, "Sensor Operational Check".) • Document front sensor actuator and rear sensor actuator • Main PCB
(2) Document not fed.	• ADF and its related sections • Drive motor and its harness • LF roller and its related gears • Solenoid and the planetary gear train • Main PCB
(3) Recording paper not fed.	• Paper feed roller and its related sections • Drive motor and its harness • Platen and its related gears • Solenoid and the planetary gear train • Main PCB
(4) Document double feeding	• ADF parts

[5] Print-image related

If the received or sent image has any problem, first make a copy with the facsimile equipment.

If the copied image is normal, the problem may be due to the remote terminal; if it is abnormal, proceed to the following checks:

Trouble	Check:
(1) Completely blank	
At the scanner	• Main PCB • CIS unit • CIS harness
At the recorder	• Main-head harness and head-power harness • Compression springs beneath the recording head • Recording head • Main PCB
(2) White vertical streaks	
At the scanner	• CIS unit
At the recorder	• Recording head
(3) All black	
At the scanner	• CIS harness • CIS unit • Main PCB
At the recorder	• Main-head harness and head-power harness • Recording head • Main PCB
(4) Black vertical streaks	
At the scanner	• CIS unit
At the recorder	• Recording head
(5) Light or dark	
At the scanner	• CIS unit • Main PCB
At the recorder	• Compression springs beneath the recording head • Position of the head adjuster
(6) Faulty image registration	
At the scanner	• CIS harness • CIS unit • Main PCB
At the recorder	• Main-head harness and head-power harness • Main PCB • Recording head

Trouble	Check:
(7) Image distortion In communications	• Error code displayed (Refer to Section 1, "ERROR INDICATION" in this chapter.) • NCU PCB • Main PCB
At the scanner	• Separation roller and its related sections • LF roller and its related gears • Solenoid and the planetary gear train • Drive motor and its harness • Main PCB
At the recorder	• Compression springs beneath the recording head • Platen and its related gears • Solenoid and the planetary gear train • Drive motor and its harness • Main PCB

[6] Others

Trouble	Check:
(1) When you turn the power ON, the beeper sounds.	• Main PCB **TIP:** The beeper sounds with one of the following three beep codes: Beep code 1 — In approx. 2-second cycle of: LHLHLHLHm — Defective device: RAM Beep code 2 — In approx. 2-second cycle of: HLHLLHLHm — Defective device: EEPROM Beep code 3 — In approx. 2-second cycle of: HLHLHLHLm — Defective device: Program ROM H: Beeps at 1.5 kHz for 0.1 second L: Beeps at 1.2 kHz for 0.1 second m: 0.5-second mute Between L and H, H and L, or L and L is a 0.1-second pause each.

July ’98
5X4401①
Printed in Japan

FAX750/FAX770/FAX870MC
FAX860/FAX880/FAX1270T
FAX-910/FAX-920/FAX-921/FAX-930/FAX-931
MFC-925/MFC970MC/MFC1970MCT

Appendix 1. EEPROM Customizing Codes

EEPROM Customizing Codes

This function allows you to customize the EEPROM according to language, function settings, and firmware switch settings. The customizing codes list is given on the next page.

■ Operating Procedure

(1) FAX750/FAX770/FAX860/FAX870MC/FAX880/FAX1270T/MFC970MC/MFC1970MCT:

←Within 2 seconds →

Press the **Function**, *****, **2**, **8**, **6**, and **4** keys in this order to make the equipment enter the maintenance mode.

←Within 2 seconds→

FAX-910/FAX-920/FAX-921/FAX-930/FAX-931/MFC-925: Press the **Menu**, *****, **2**, **8**, **6**, and **4** keys in this order to make the equipment enter the maintenance mode.

The equipment beeps for approx. one second and displays "▮▮ MAINTENANCE ▮▮▮" on the LCD.

(2) Press the **7** and **4** keys in this order in the initial stage of the maintenance mode.

The current customizing code (e.g., 1101 in the case of FAX770 U.S.A. versions) appears.

(3) Enter the desired customizing code (e.g., 0102 in the case of FAX770 Canadian versions).

The newly entered code appears.

NOTE: *If a wrong 4-digit code is entered, the equipment will malfunction.*

(4) Press the **Start** key.

The equipment saves the setting and returns to the initial stage of the maintenance mode.

If you press the **Stop** key or no keys are pressed for one minute in the above procedure, the equipment stops the procedure and returns to the initial stage of the maintenance mode.

■ EEPROM Customizing Codes List

Versions	Model			
	FAX750	FAX770	FAX870MC	MFC970MC
CANADA	0002	0102	0002	0002
U.S.A.	1001	1101	1001	1001
ASIA		0040	0040	
CHINA			0020	
GULF		0101	0001	
HONG KONG		0040	0040	
INDONESIA		0040	0040	
INDIA		0045	0045	
RUSSIA		0101	0001	
BRAZIL		0101		
MEXICO		0035		0035
SOUTH AMERICA		0035		0035

Versions	Model			
	FAX860	FAX880	FAX1270T	MFC1970MCT
CHINA			0020	0020
TAIWAN	0023	0023		

Versions	Model				
	FAX-910	FAX-920/921	MFC-925	FAX-930/931	MFC-970MC
GERMANY	0003	0003	0003	0003	
UK		0004	0004	0004	
FRANCE		0005	0005	0005	
AUSTRALIA		0006	0006	0006	0006
NORWAY		0007	0007	0007	
BELGIUM		0008	0008	0008	
HOLLAND		0009	0009	0009	
SWITZERLAND	0010	0010	0010	0010	
IRELAND		0011	0011	0011	
FINLAND		0012	0012	0012	
DENMARK		0013	0013	0013	
AUSTRIA		0014	0014	0014	
SPAIN		0015	0015	0015	
ITALY		0016	0016	0016	
ISRAEL		0017	0017	0017	
PORTUGAL		0018	0018	0018	
SWEDEN		0026	0026	0026	
NEW ZEALAND		0027	0027	0027	0027
EURO GENERIC		0004		0004	

FAX750/FAX770/FAX870MC
FAX860/FAX880/FAX1270T
FAX-910/FAX-920/FAX-921/FAX-930/FAX-931
MFC-925/MFC970MC/MFC1970MCT

Appendix 2. Circuit Diagrams

A. Main PCB
B. Network Control Unit (NCU) PCB
C. Control Panel PCB
D. Power Supply PCB

FAX750/FAX770/FAX870MC
FAX-910/FAX-920/FAX-921/FAX-930/FAX-931
MFC-925/MFC970MC

Appendix 2. Circuit Diagrams

A. Main PCB
B. Network Control Unit (NCU) PCB
C. Control Panel PCB
D. Power Supply PCB

1. * OF EACH PART SHOWS UN-MOUNTING.
2. ◇:REFER TO UG6640000(T5 LE MAIN #5)

L12 L102B
GND FG

Q5
RH5VA43
VCC
OUT
GND
+5V
R62
1.5K
C53
CC104
GND
RSTL 16A,47B

#5
T7D96
RST 45
RSTL 16A,47B

26D RAS R71 100 RAS0 70
26D CAS R70 100 CAS 74
26D,27A RMRD R95 100 MEMRD 83
26D RMWE MEMWR 84
27B ROMC R93 100 ROMC 85
IORD 46
IOWR 47

+25V +5V
PANEL
1 6 2 3 4 7 5
P9 ◇
R39
100K
R37 270
R31 470
R38 100Ω
C28 * C27 * C26 * C25 CC101
GND

25B EPDO EEDAT 134
25B EPCK EECLK 135
PCLK 137
SDIN 138
SDOUT 139
FRNT SEN1 128
37C REAR SEN2 129
37D CSEN SEN3 130
37A FSEN SEN4 131
37B RSEN SEN5 132
37C RIBN SEN6 133

32A TG 8
CL1 9
CL2 10
32A RB RDCK1 11
RDCK2 12
33C CLMP RDCLP 13
33B LIGT R63 10K PWMLED 14
33C CPWM PWMCLP 15
C55 CC104
GND

32E ST1 95
32E ST2 94
32E HDC 93
32E DOUT 92
32E DIN 89
32F LATC 88
35E PWON 87
GND R64 * PIO5 25
PIO6 86
PIO7 104
41F DAST R88 PWM4 143
C78 ◇
GND

RTCCON 27 RSTL 14A
RVDD 28 RVDD
REXT 30
RXT 29
CK1HZ 26
XT1
C-001R
C56 CC15P C67 CC15P
GND

TXD 3 TXD
RXD 4 RXD
CTS 5 CTS
RTS 6 RTS
CRXD 7 CRXD
PBUS 17B

SOL 16 SOL 23F
PM1 17 MM1
PM2 20 MM2
PM3 21 MM3
PM4 22 MM4
MTI0 23 MTI0
MTI1 24 MTI1
MBUS 23C

D0 75 D0
D1 76 D1
D2 77 D2
D3 78 D3
D4 79 D4
D5 80 D5
D6 81 D6
D7 82 D7
DBUS 26E

A0 48 A0
A1 49 A1
A2 50 A2
A3 51 A3
A4 52 A4
A5 53 A5
A6 56 A6
A7 57 A7
A8 58 A8
A9 59 A9
A10 60 A10
A11 61 A11
A12 62 A12
A13 63 A13
A14 65 A14
A15 66 A15
A16 67 A16
A17 68 A17
A18 69 A18
ABUS 26E

TST1 42 L5V
TST2 43

+5V
L5 L102B
16B PBUS
RTS L8 L102B
TXD L6 L102B
RXD L7 L102B
CTS L9 L102B
CRXD L10 L102B
GND
PCI
P6
B8B-PH
WHITE
1 6 3 5 7 8 2 4

#5
T7D96

42F DASND PWMSND 103
43D DAREC PWMREC 102
R54 ◇
R55 10K
R90 *
C45 CC104 C39 ◇
GND

47E SPON SPON 140
46E VOL1 VOL1(OD) 141
46E VOL2 VOL2(OD) 142
46E VOL3 VOL3(OD) 144
35F,43C CMLH CML 119
43A TELL TEL 120
46D RNGL RNGL 121
45E RNGO RING 122
43E PLS PLS 101
42E RDPS DPS 100
42E EAT EAT 99
42D OTO OTO 123
45A HRAD HRAD(OD) 124
45B FOGM FOGM(OD) 125
37E HOOK HOOK 127
42F CI CI 98
42F TLOF TLOF 97
42F TLO2 TLOF2 96

DPDMCK 110 200X3 R51 DMK
APDMCK 111 R53 AMK
DPDMDT 112 R52 DMT
APDMDT 113 AMT
C3 114 C3
C4 115 C4
C5 117 C5
MUTE 118 MUT
TBUS 48B

MEXTL 106
MTXL 108
MCLK 105
XT2
20.736MHZ
R91 150Ω
R56 150Ω
C43 CC10P C44 CC20P
GND

+25V
C40 ◇
R57 75K
R58 10KF C48 CC104
GND GND

42F ADLC CMPLC 32
32B VID CMPRD 35
CMPTH 34
32D CP3I CMPVL 33
CPNN 36
38
+5V AVDD 37
39
REFH
40
REFL
+5V R59 75F
R60 100F
R61 75F
C50 CC104 C51 CC104
GND
AGND 31
41
C65 CC104 C49 CC104
GND

VDD 2 18 54 72 90 109 126
VSS 1 19 44 55 64 73 91 107 116 136

+5V
L3 * L11 *
L5V
C38 CC104 C41 CC104 C42 CC104 C46 CC104 C47 CC104 C52 CC104 C54 CC104 C64 CC104
GND

+5V
D1
MA700
RVDD
R81 1K
C68 CC104
C3 ◇
GND

A	**Main PCB 1/5 (FAX750/FAX770/FAX-910/ FAX-920/FAX-921/MFC-925)**

1. * OF EACH PART SHOWS UN-MOUNTING.
2. ◇:REFER TO UG6640000(T5 LE MAIN #5)

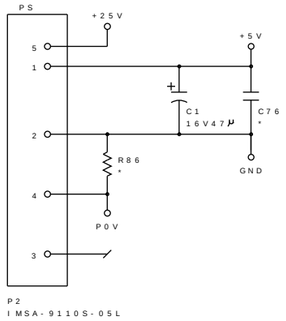

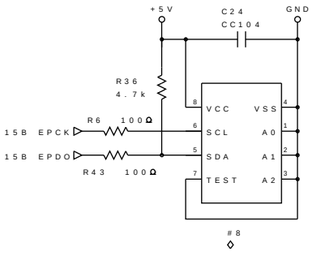

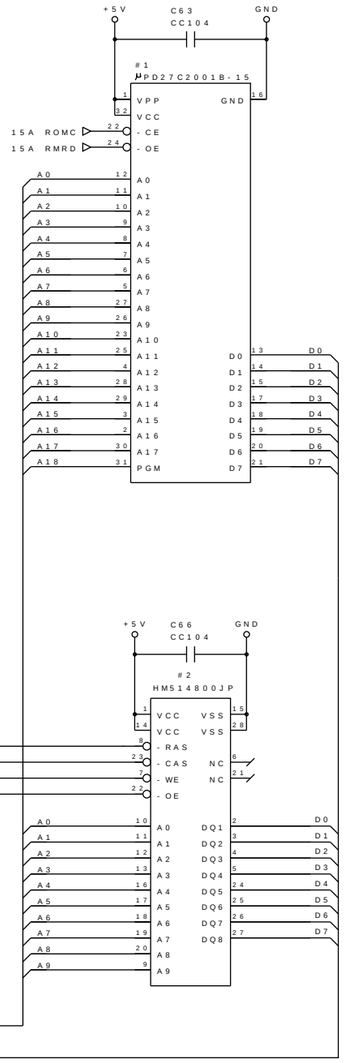

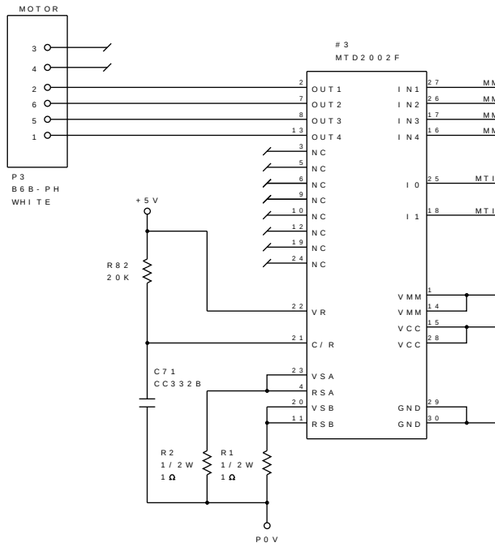

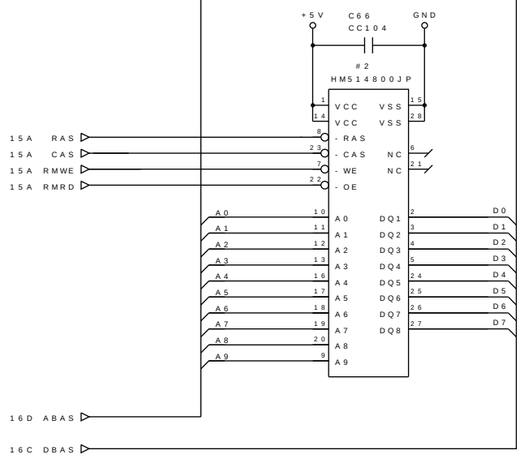

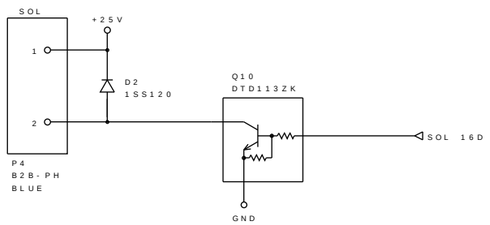

A	**Main PCB 2/5 (FAX750/FAX770/FAX-910/ FAX-920/FAX-921/MFC-925)**

1. * OF EACH PART SHOWS UN-MOUNTING.
2. ◇:REFER TO UG6640000(T5 LE MAIN #5)

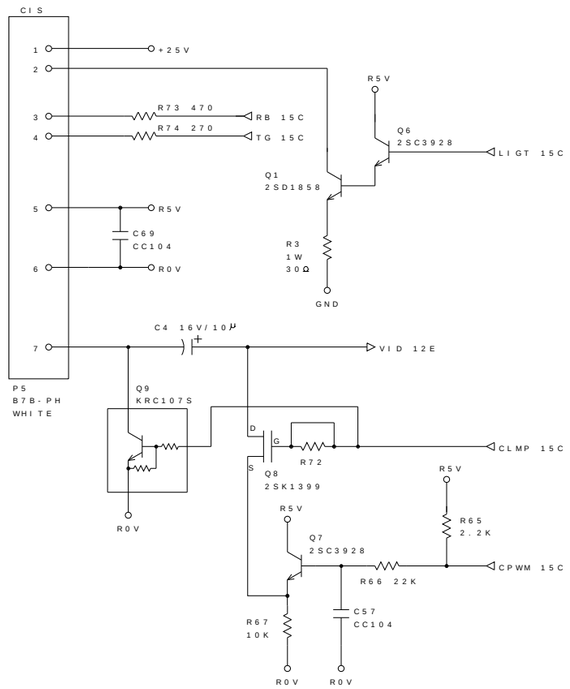

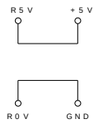

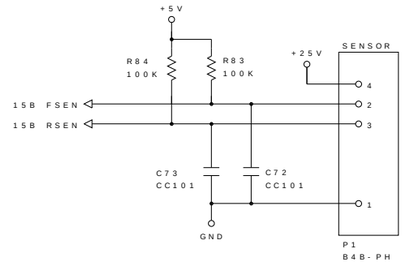

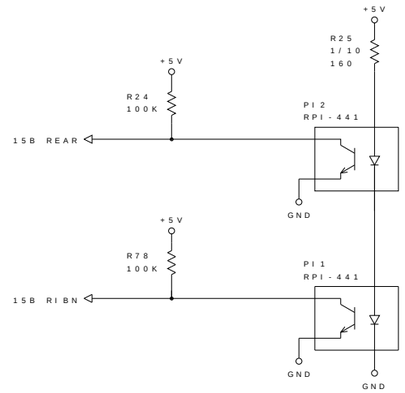

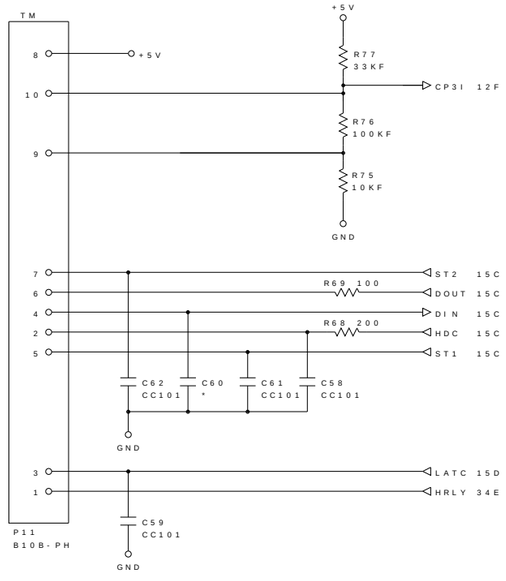

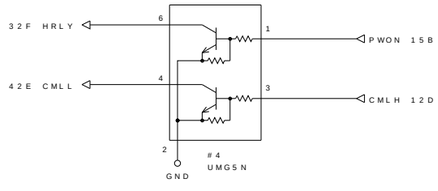

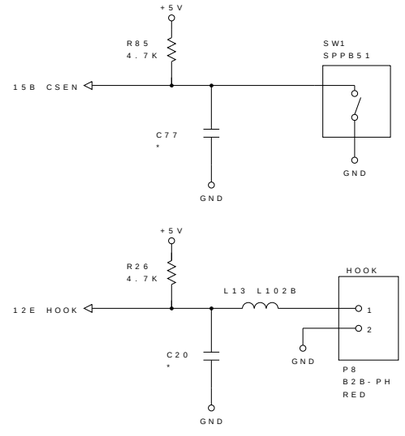

A	**Main PCB 3/5 (FAX750/FAX770/FAX-910/ FAX-920/FAX-921/MFC-925)**

1. * OF EACH PART SHOWS UN-MOUNTING.
2. ◇:REFER TO UG6640000(T5 LE MAIN #5)

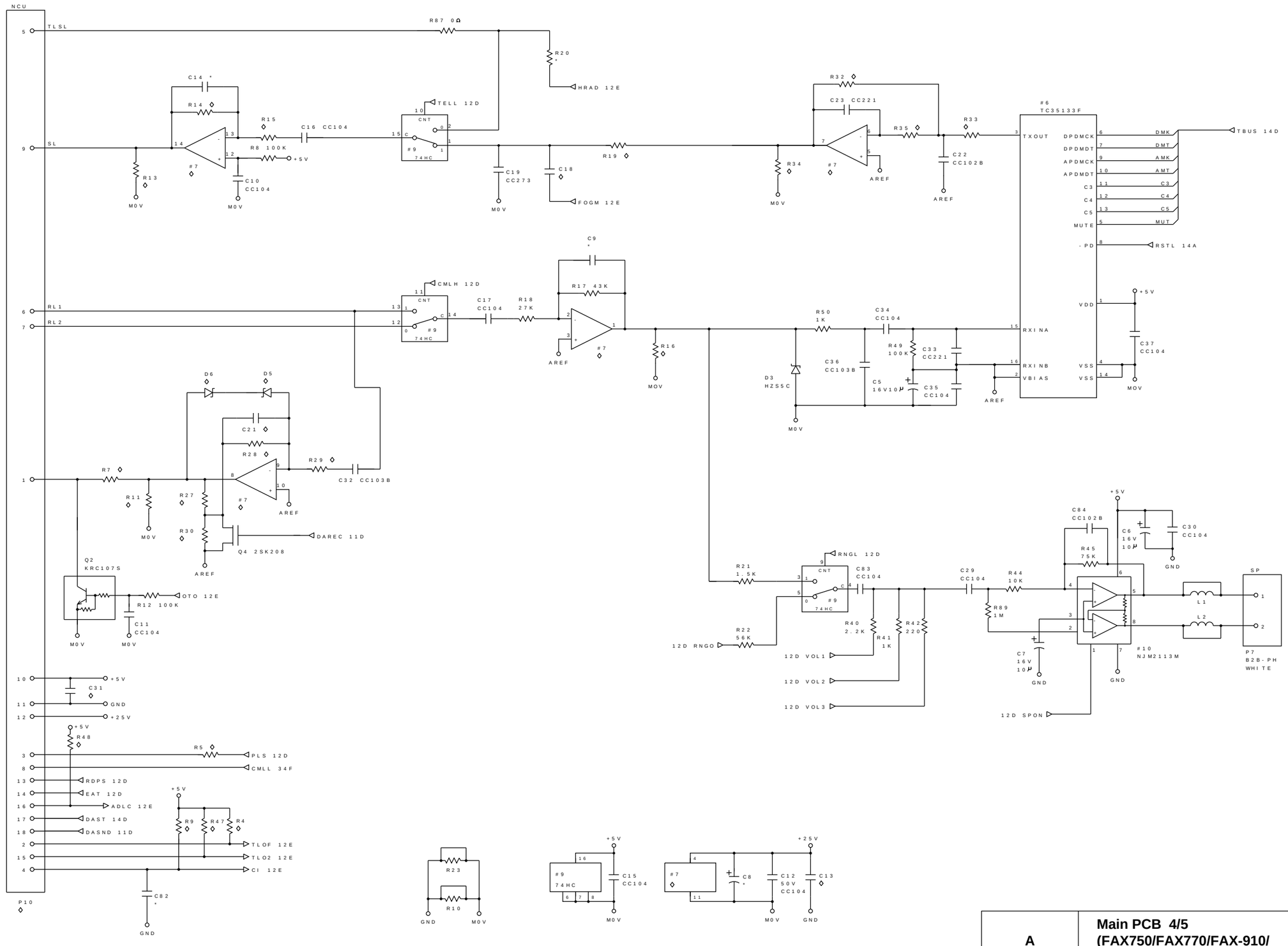

A	**Main PCB 4/5 (FAX750/FAX770/FAX-910/ FAX-920/FAX-921/MFC-925)**

		US	EUR(21)	EUR(22)						
		S.ASSY 01	S.ASSY 21	S.ASSY 22						
		UG6628001 MAIN PCB	UG6686021 MAIN PCB	UG6686022 MAIN PCB						
PAGE	NO.									
1	P9	B6B-PH RED	B6B-PH RED	B6B-PH RED						
	R54	-	10KΩ	10KΩ						
	R88	-	10KΩ	10KΩ						
	C3	EC 5.5B473	EC 5.5B473	EC 5.5B224						
	C39	-	CC104	CC104						
	C40	-	-	-						
	C78	-	CC104	CC104						
2	#8	EEP16KSER	EEP16KSER	EEP16KSER						
3										
4	#7	KI324	KI324	KI324						
	P10	IMSA-9110S-12L	IMSA-9110S-18L	IMSA-9110S-18L						
	D5	HZU2.0B	UDZ2.7B	UDZ2.7B						
	D6	HZU2.0B	UDZ2.7B	UDZ2.7B						
	R4	1KΩ	22KΩ	22KΩ						
	R5	1KΩ	680Ω	680Ω						
	R7	1.5KΩ	1.5KΩ(F)	1.5KΩ(F)						
	R9	22KΩ	120KΩ	120KΩ						
	R11	4.7KΩ	680Ω	680Ω						
	R13	1/10W 1KΩ	1/10W 1KΩ	1/10W 1KΩ						
	R14	56KΩ	56KΩ(F)	56KΩ(F)						
	R15	10KΩ(F)	7.5KΩ(F)	7.5KΩ(F)						
	R16	4.7KΩ	1KΩ	1KΩ						
	R19	1.5KΩ	1.5KΩ(F)	1.5KΩ(F)						
	R27	1KΩ	1KΩ(F)	1KΩ(F)						
	R28	100KΩ	39KΩ(F)	39KΩ(F)						
	R29	200KΩ	130KΩ(F)	130KΩ(F)						
	R30	2.2KΩ	680Ω(F)	680Ω(F)						
	R32	75KΩ	75KΩ(F)	75KΩ(F)						
	R33	56KΩ	56KΩ(F)	56KΩ(F)						
	R34	4.7KΩ	4.7KΩ	4.7KΩ						
	R35	56KΩ	56KΩ(F)	56KΩ(F)						
	R47	22KΩ	180KΩ	180KΩ						
	R48	10KΩ	-	-						
	C13	-	-	-						
	C18	-	CC105	-						
	C21	CC102B	CC681B	CC681B						
	C31	-	-	-						

"-" SHOWS UN-MOUNTING

A	**Main PCB 5/5 (FAX750/FAX770/FAX-910/ FAX-920/FAX-921/MFC-925)**

1. * OF EACH PART SHOWS UN-MOUNTING.
2. ◇:REFER TO UG6663000(T5 MC MAIN #6)

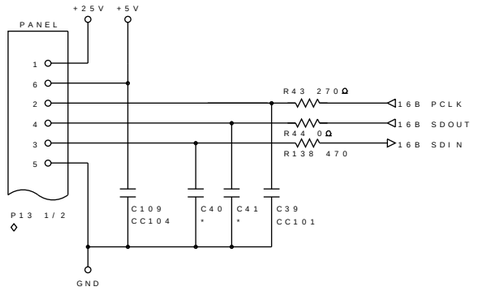

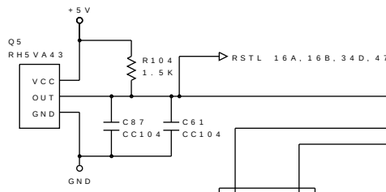

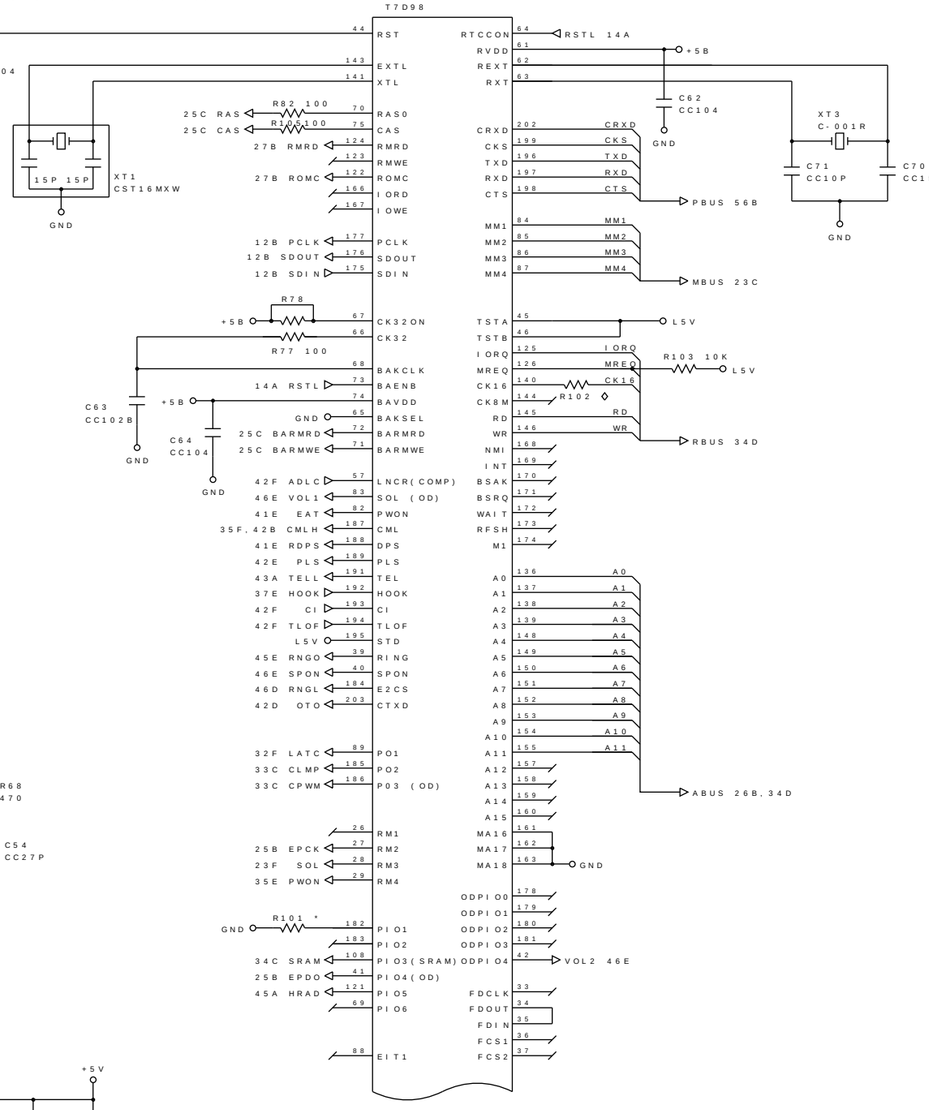

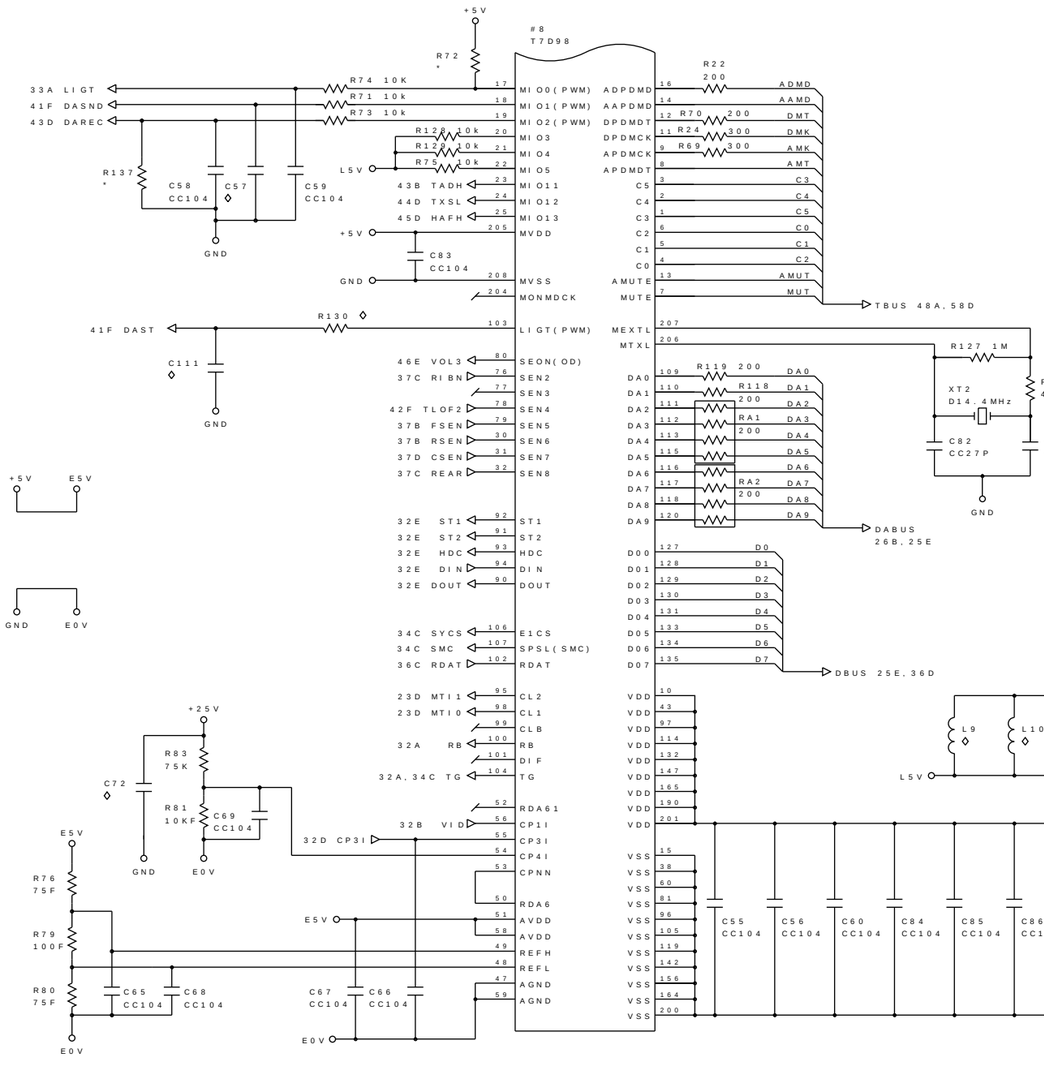

A	**Main PCB 1/6 (FAX870MC/MFC970MC/FAX-930/ FAX-931)**

1. * OF EACH PART SHOWS UN-MOUNTING.
2. ◇:REFER TO UG6663000(T5 MC MAIN #6)

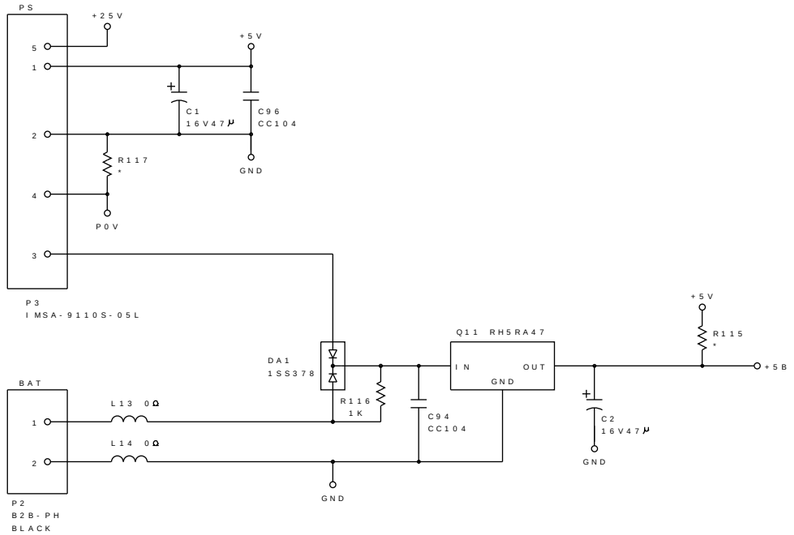

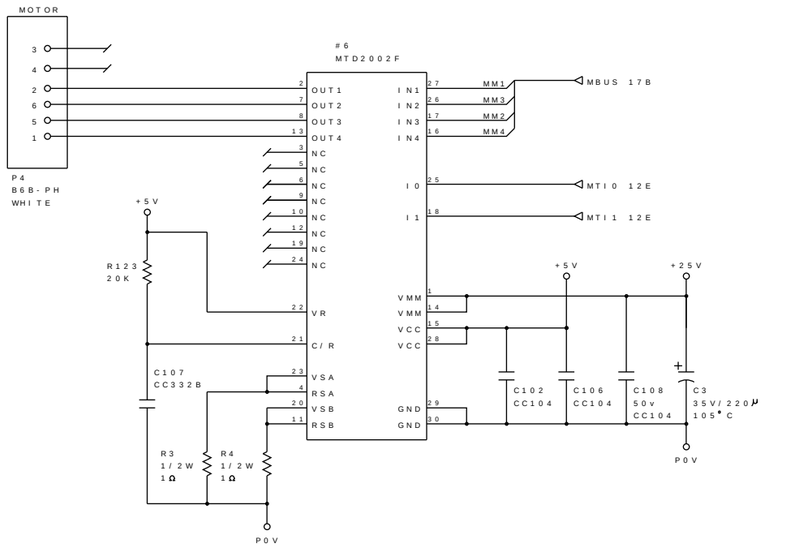

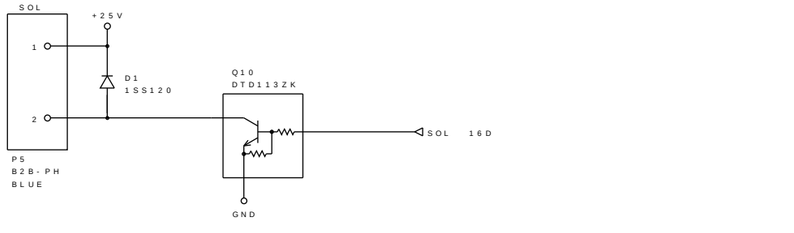

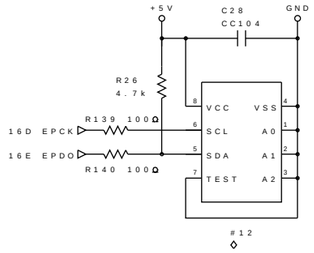

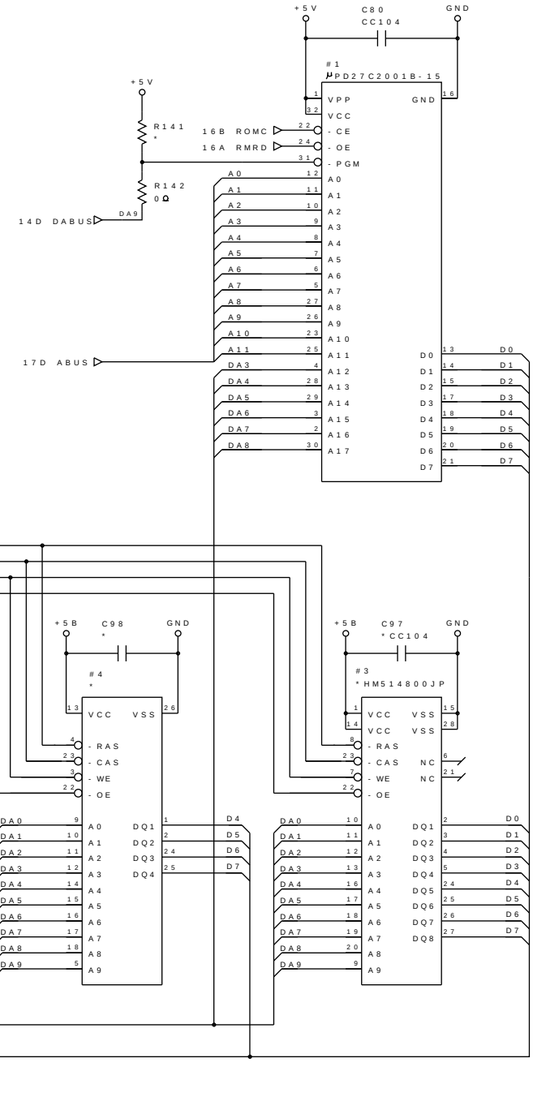

A	**Main PCB 2/6 (FAX870MC/MFC970MC/FAX-930/ FAX-931)**

1. * OF EACH PART SHOWS UN-MOUNTING.
2. ◇:REFER TO UG6663000(T5 MC MAIN #6)

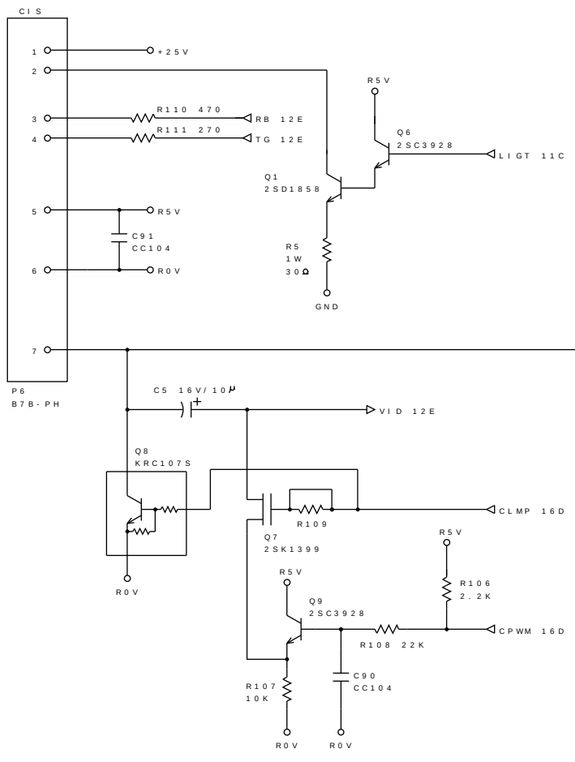

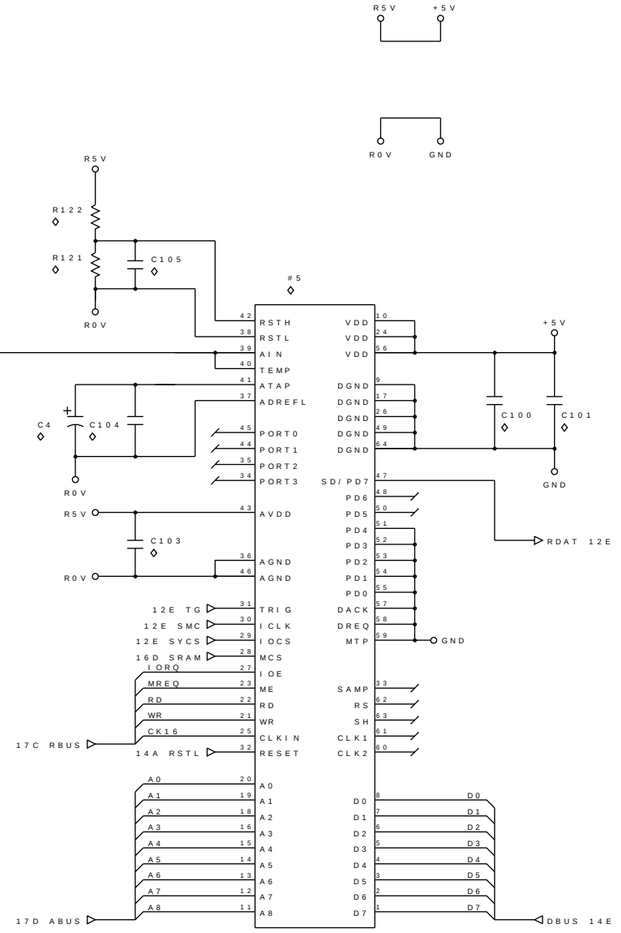

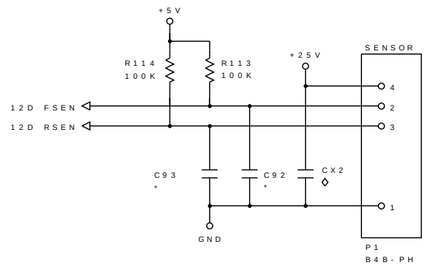

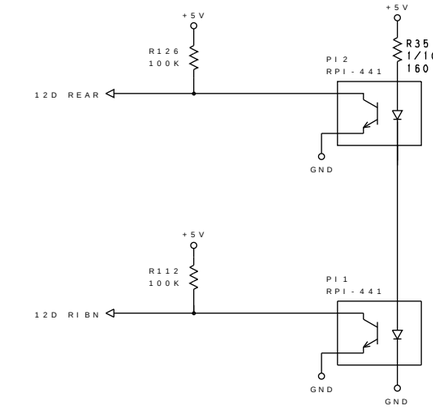

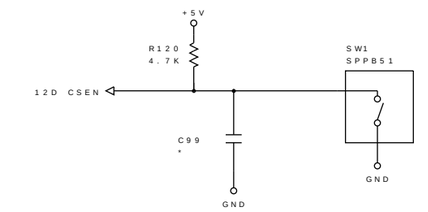

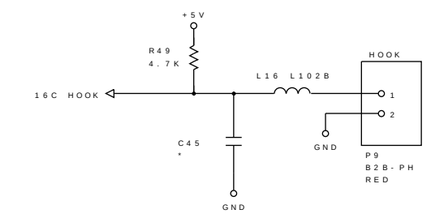

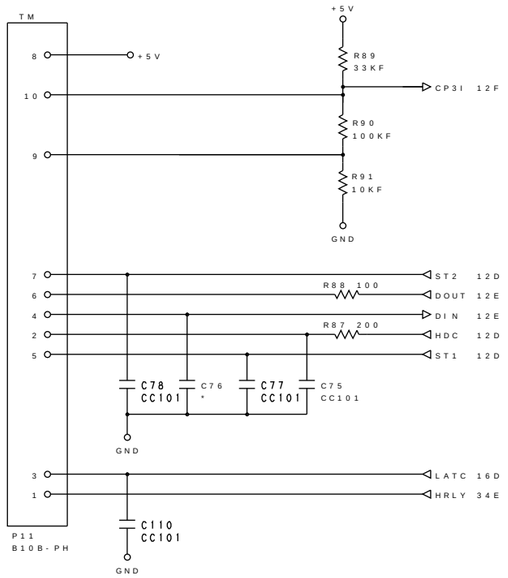

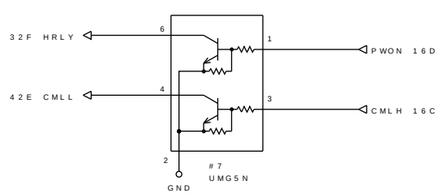

A

Main PCB 3/6 (FAX870MC/MFC970MC/FAX-930/ FAX-931)

1. * OF EACH PART SHOWS UN-MOUNTING.
2. ◇:REFER TO UG6663000(T3 MC MAIN #6)

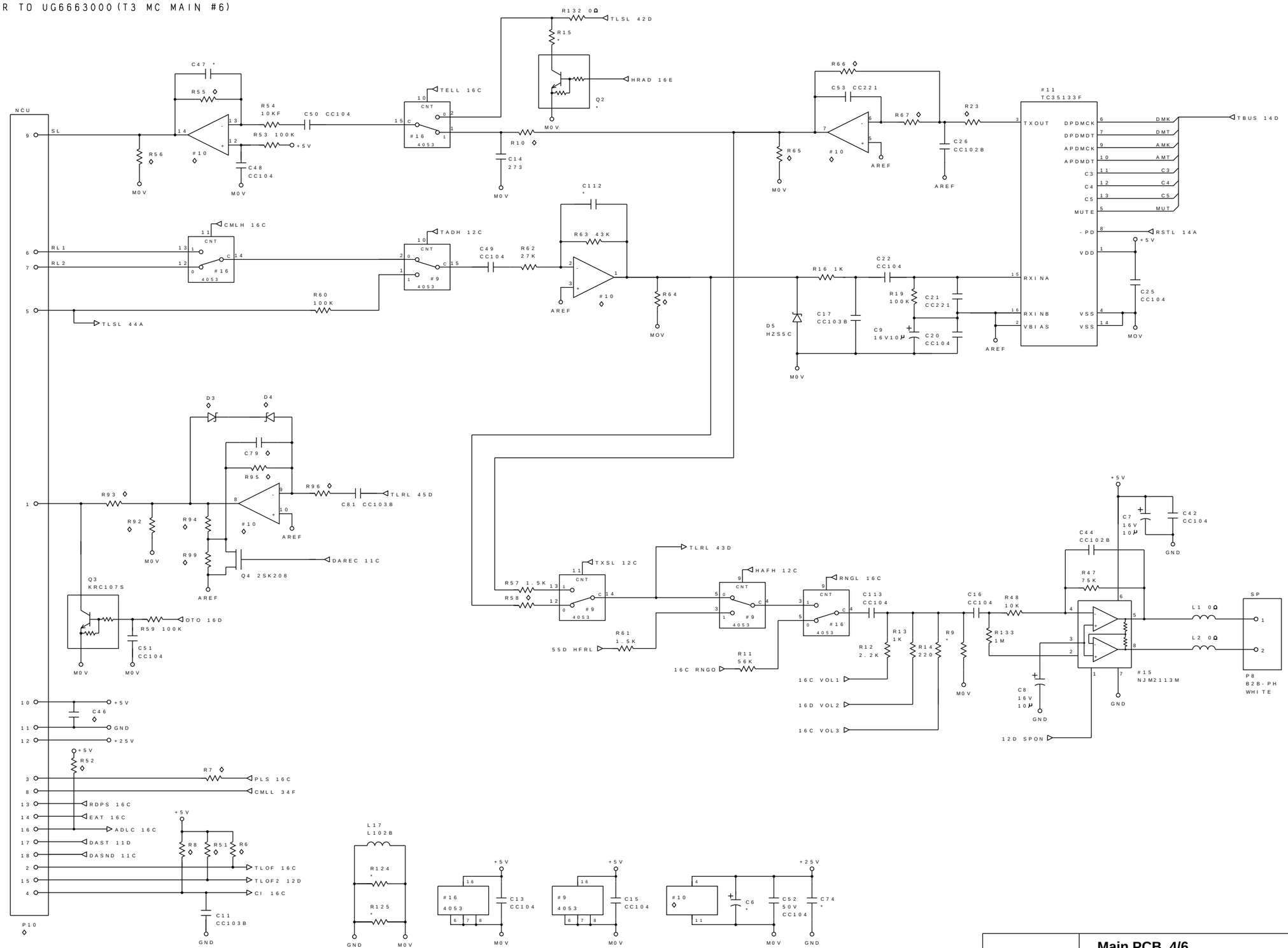

A	**Main PCB 4/6 (FAX870MC/MFC970MC/FAX-930/ FAX-931)**

1. * OF EACH PART SHOWS UN-MOUNTING.
2. ◇:REFER TO UG6663000 (T5 MC MAIN #6)

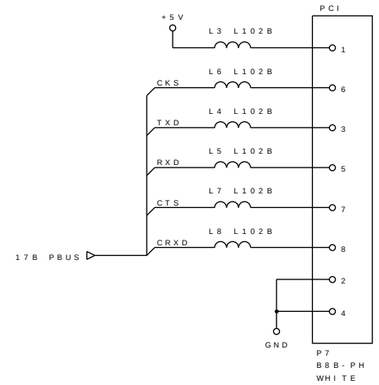

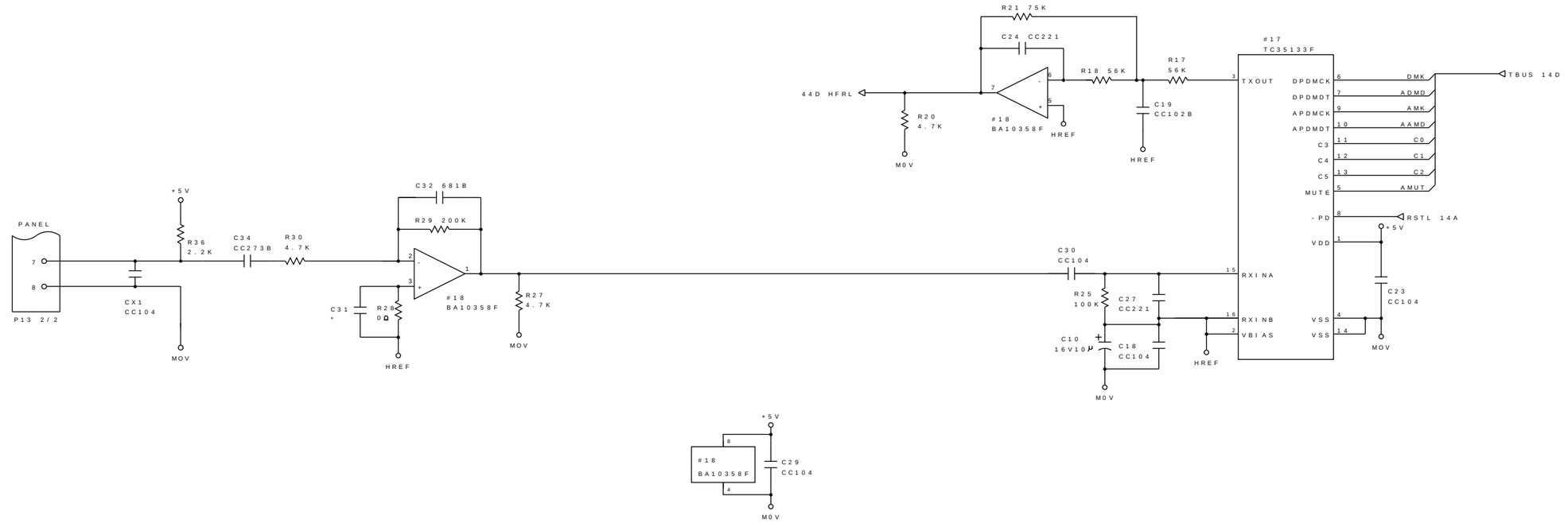

A	**Main PCB 5/6 (FAX870MC/MFC970MC/FAX-930/ FAX-931)**

		US	EUR							
		S.ASSY 11	S.ASSY 31							
		UG6655011 MAIN PCB	UG6687031 MAIN PCB							
PAGE	NO.									
1	P13	B7B-PH BLUE	B7B-PH BLUE							
	R102	-	-							
	R130	10KΩ	10KΩ							
	C57	0Ω	CC104							
	C72	-	-							
	C111	CC104	CC104							
	L9	0Ω	0Ω							
	L10	0Ω	0Ω							
	L11	0Ω	0Ω							
2	#12	EEP16KSER	EEP16KSER							
3	#5	-	-							
	R121	-	-							
	R122	-	-							
	C4	-	-							
	C100	-	-							
	C101	-	-							
	C103	-	-							
	C104	-	-							
	C105	-	-							
	CX2	-	-							
4	#10 P10	KI324 IMSA-9110S-12L	KI324 IMSA-9110S-18L							
	D3, D4	ZDHZU-2.0B	ZDHZU-2.7B							
	R6	1KΩ	22KΩ							
	R7	1KΩ	680Ω							
	R8	22KΩ	120KΩ							
	R10	1.5KΩ	1.5KΩ(F)							
	R23	56KΩ	56KΩ(F)							
	R51	22KΩ	180KΩ							
	R52	10KΩ	-							
	R55	56KΩ	56KΩ(F)							
	R56	1/10W 1KΩ	1/10W 1KΩ							
	R58	1.5KΩ	1.5KΩ(F)							
	R64	4.7KΩ	1KΩ							
	R65	4.7KΩ	4.7KΩ							
	R66	75KΩ	75KΩ(F)							
	R67	56KΩ	56KΩ(F)							
	R92	4.7KΩ	680Ω							
	R93	1.5KΩ	1.5KΩ(F)							
	R94	1KΩ	1KΩ(F)							
	R95	100KΩ	39KΩ(F)							
	R96	300KΩ	200KΩ(F)							
	R99	2.2KΩ	680Ω(F)							
	C46	-	-							
	C79	CC102B	CC681B							
5										

"-" SHOWS UN-MOUNTING

A	**Main PCB 6/6 (FAX870MC/MFC970MC/FAX-930/ FAX-931)**

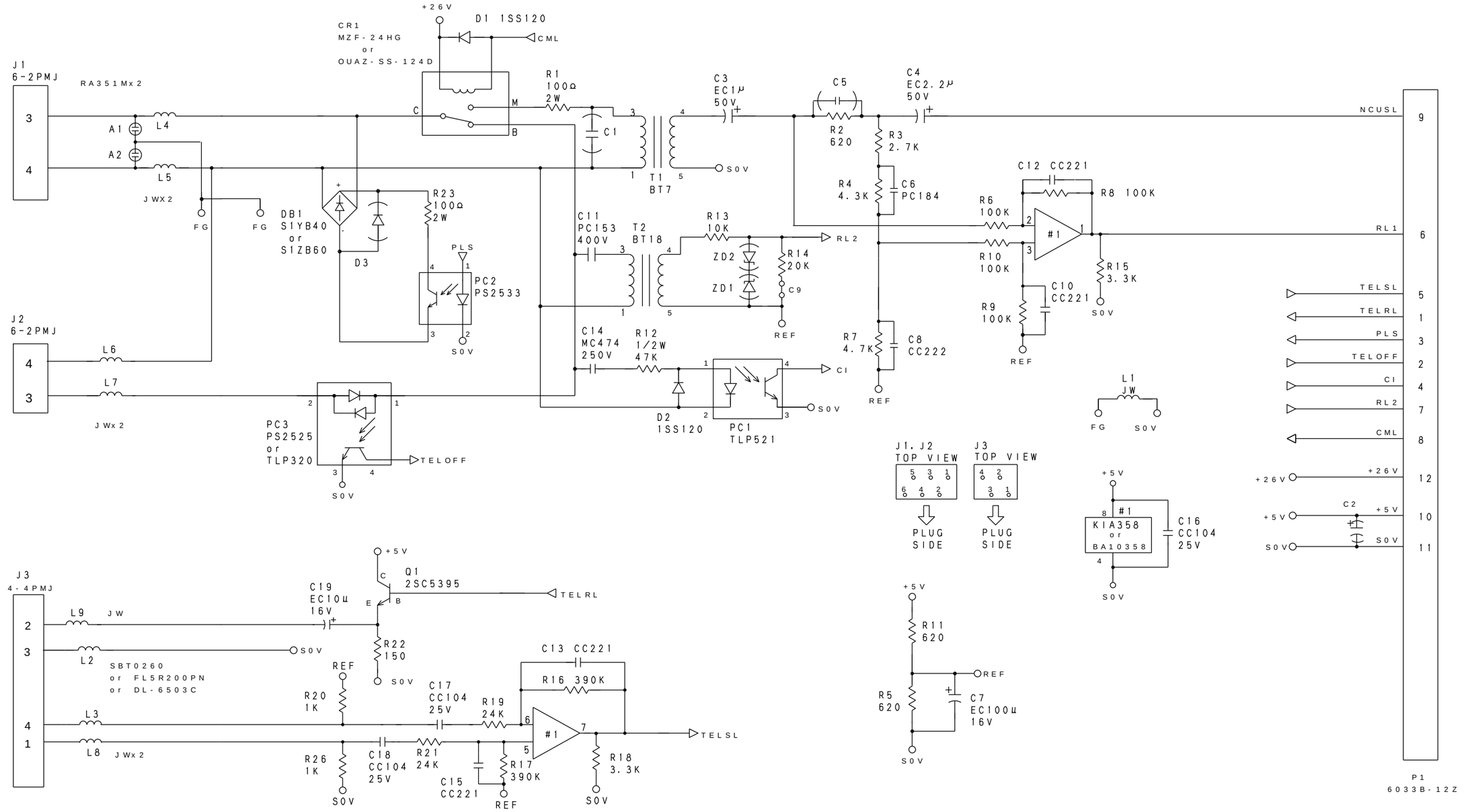

7. MC：メタライズフィルムコンデンサ（METALLIZED POLYESTER FILM CAPACITOR）
6. PC：ポリエステルフィルムコンデンサ（POLYESTER FILM CAPACITOR）
5. CC：セラミックコンデンサ（CERAMIC CAPACITOR）
4. EC：電解コンデンサ（ALUMINUM ELECTROLYTIC CAPACITOR）
3. COMPONENTS IN PARENTHESIS NOT TO BE MOUNTED.
3. （ ）内ノ部品ハ未実装トスル。
2. UNLESS OTHERWISE SPECIFIED, THE VOLTAGE RESISTANCE OF CAPACITORS IS 25V OR 50V.
2. 指示ナキコンデンサモノ耐圧ハ25V又ハ50Vトスル。
1. UNLESS OTHERWISE SPECIFIED, POWER CONSUMPTION OF RESISTORS IS 1/4W.
1. 指示ナキ抵抗ノ消費電力ハ1/4Wトスル。

B	**NCU** **(FAX750/FAX770/FAX-920)** **(U.S.A., CANADA, GULF, NEW ZEALAND, ISRAEL)**

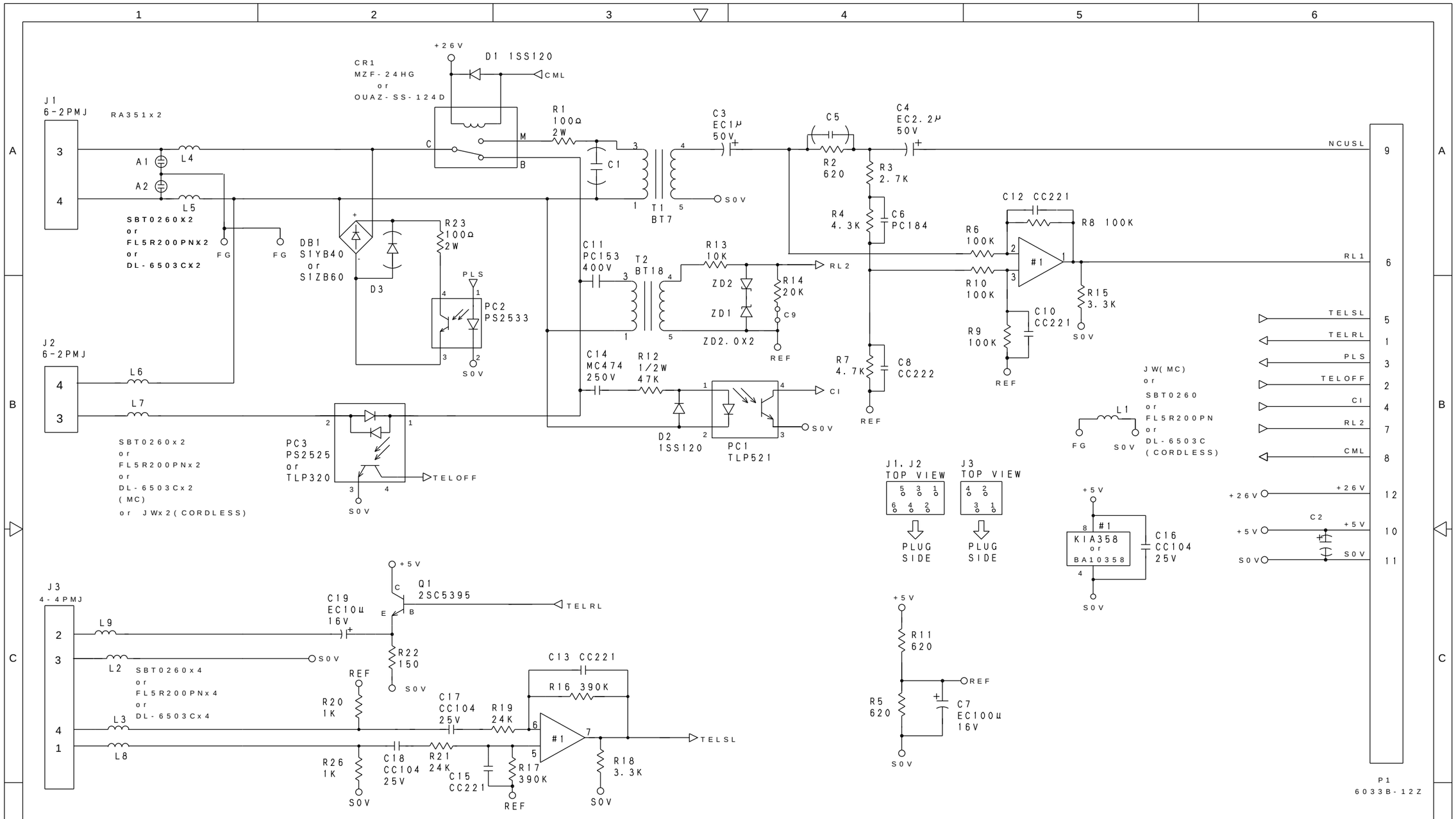

7. MC：メタライズフィルムコンデンサ（METALLIZED POLYESTER FILM CAPACITOR）
6. PC：ポリエステルフィルムコンデンサ（POLYESTER FILM CAPACITOR）
5. CC：セラミックコンデンサ（CERAMIC CAPACITOR）
4. EC：電解コンデンサ（ALUMINUM ELECTROLYTIC CAPACITOR）
3. COMPONENTS IN PARENTHESIS NOT TO BE MOUNTED.
3. （ ）内ノ部品ハ未実装トスル。
2. UNLESS OTHERWISE SPECIFIED, THE VOLTAGE RESISTANCE OF CAPACITORS IS 25V OR 50V.
2. 指示ナキコンデンサモノ耐圧ハ25V又ハ50Vトスル。
1. UNLESS OTHERWISE SPECIFIED, POWER CONSUMPTION OF RESISTORS IS 1/4W.
1. 指示ナキ抵抗ノ消費電力ハ1／4Wトスル。

B	**NCU (FAX870MC/MFC970MC/FAX-930/ FAX-931)** (U.S.A., CANADA, GULF, NEW ZEALAND, ISRAEL)

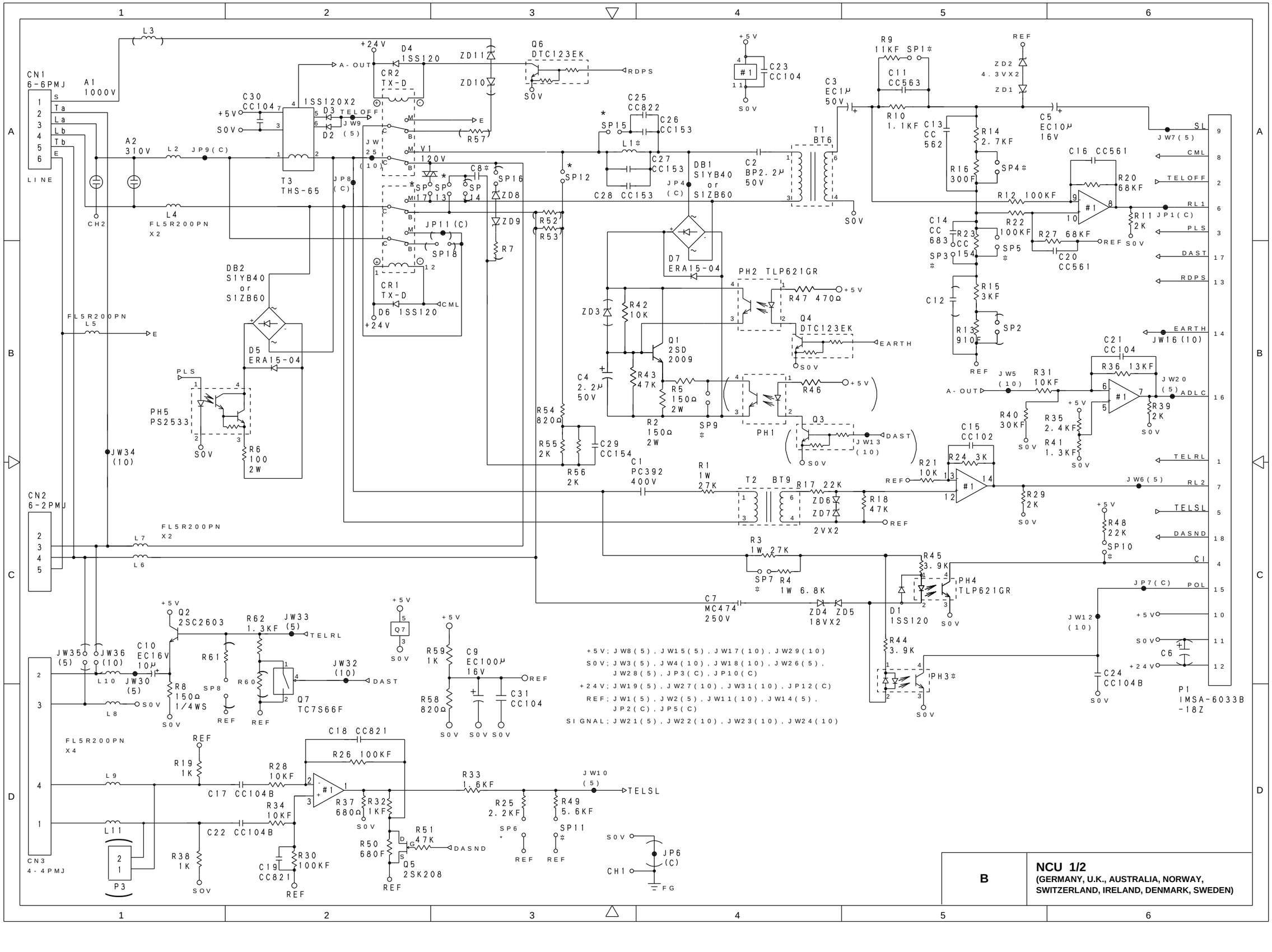
CN1 6-6PMJ
LINE
A1 1000V
CH2
L3
A2 310V
L4 FL5R200PN X2
L2
JP9(C)
T3 THS-65
JP8 (C)
+24V
D4 1SS120
A-OUT
CR2 TX-D
ZD11
ZD10
Q6 DTC123EK
RDPS
S0V
C30 CC104
+5V
S0V
1SS120X2
D3 TELOFF
JW9 (5)
D2
E
R57
JW 25 (10)
V1 120V
C8*
SP15
SP16
ZD8
ZD9
R7
SP12
SP17
SP13
SP14
JP11(C)
SP18
CR1 TX-D
D6 1SS120
CML
+24V
R52
R53
C25 CC822
C26 CC153
L1*
C27 CC153
C28 CC153
DB1 S1YB40 or S1ZB60
JP4 (C)
C2 BP2.2μ 50V
T1 BT6
C3 EC1μ 50V
C23 CC104
R9 11KF SP1*
C11 CC563
R10 1.1KF
REF
ZD2 4.3VX2
ZD1
C5 EC10μ 16V
C13 CC 562
R14 2.7KF
R16 300F
SP4*
C16 CC561
R20 68KF
R12 100KF
R11 2K
JP1(C)
SL
JW7(5)
CML
TELOFF
RL1
PLS
DAST
RDPS
C14 CC 683
R23 CC 154
SP3*
R22 100KF
SP5*
R27 68KF
C20 CC561
C12
R15 3KF
R13 910F
SP2
EARTH
JW16(10)
C21 CC104
R36 13KF
JW5 (10)
R31 10KF
A-OUT
JW20 (5)
ADLC
R39 2K
R40 30KF
R35 2.4KF
R41 1.3KF
C15 CC102
R24 3K
R21 10K
R29 2K
JW6(5)
RL2
TELRL
DASND
CI
POL
R48 22K
SP10*
JP7(C)
JW12 (10)
C24 CC104B
C6
P1 IMSA-6033B -18Z
D7 ERA15-04
PH2 TLP621GR
R47 470Ω
Q4 DTC123EK
EARTH
ZD3
R42 10K
Q1 2SD 2009
R43 47K
C4 2.2μ 50V
R5 150Ω 2W
R2 150Ω 2W
SP9*
PH1
R46
Q3
JW13 (10)
DAST
R54 820Ω
R55 2K
C29 CC154
R56 2K
C1 PC392 400V
R1 1W 27K
T2 BT9
R17 22K
ZD6
ZD7
2VX2
R18 47K
REF
R3 1W 27K
SP7* R4 1W 6.8K
C7 MC474 250V
ZD4 ZD5 18VX2
R45 3.9K
PH4 TLP621GR
D1 1SS120
R44 3.9K
PH3*
DB2 S1YB40 or S1ZB60
D5 ERA15-04
FL5R200PN L5
E
PLS
PH5 PS2533
R6 100 2W
JW34 (10)
CN2 6-2PMJ
FL5R200PN X2
L7
L6
L8
JW35 (5)
JW36 (10)
L10
JW30 (5)
C10 EC16V 10μ
R8 150Ω 1/4WS
SP8
Q2 2SC2603
R62 1.3KF
JW33 (5)
TELRL
R61
R60
JW32 (10)
DAST
Q7 TC7S66F
Q7
R59 1K
C9 EC100μ 16V
R58 820Ω
C31 CC104
+5V; JW8(5), JW15(5), JW17(10), JW29(10)
S0V; JW3(5), JW4(10), JW18(10), JW26(5), JW28(5), JP3(C), JP10(C)
+24V; JW19(5), JW27(10), JW31(10), JP12(C)
REF; JW1(5), JW2(5), JW11(10), JW14(5), JP2(C), JP5(C)
SIGNAL; JW21(5), JW22(10), JW23(10), JW24(10)
CN3 4-4PMJ
FL5R200PN X4
L9
L11
P3
C18 CC821
R26 100KF
R19 1K
R28 10KF
C17 CC104B
R34 10KF
C22 CC104B
R38 1K
C19 CC821
R30 100KF
R37 680Ω
R32 1KF
R33 1.6KF
JW10 (5)
TELSL
R25 2.2KF
R49 5.6KF
SP6*
SP11*
R50 680F
R51 47K
DASND
Q5 2SK208
JP6 (C)
CH1
FG
B
NCU 1/2
(GERMANY, U.K., AUSTRALIA, NORWAY, SWITZERLAND, IRELAND, DENMARK, SWEDEN)

ITEM	UG6711-0XX NCU363ASSY1AT5 #		UG6712-0XX NCU363ASSY1BT5 #		UG6713-0XX NCU363ASSY1CT5 #			
	03 GER	10 SWI	04 UK	26 SWE	06 ARL	07 NOR	11 IRE	13 DEN
PH3	-	-	TLP620GR	TLP620GR	-	-	-	-
L1	RCH855-332K	RCH855-332K	5mm JUMPER	5mm JUMPER	5mm JUMPER	5mm JUMPER	5mm JUMPER	5mm JUMPER
C8	-	-	PC250B105	PC250B105	-	-	-	-
SP1	-	-	-	-	-	-	-	ASSY
SP3	ASSY	-	-	ASSY	ASSY	ASSY	-	-
SP4	ASSY	-	-	-	ASSY	-	-	ASSY
SP5	-	ASSY	-	-	-	-	-	-
SP6	-	ASSY	-	ASSY	ASSY	-	ASSY	ASSY
SP7	ASSY	-	ASSY	-	-	-	-	-
SP9	-	-	-	-	ASSY	ASSY	-	-
SP10	-	-	-	ASSY	-	ASSY	ASSY	-
SP11	ASSY	ASSY	ASSY	-	ASSY	ASSY	-	-
SP12	-	-	ASSY	-	-	-	-	-
SP13	-	-	ASSY	-	-	-	-	-
SP15	-	ASSY	-	-	-	-	-	-
SP17	ASSY	ASSY	-	ASSY	ASSY	ASSY	ASSY	-

'-' SHOWS UN-MOUNTING

B

NCU 2/2
(GERMANY, U.K., AUSTRALIA, NORWAY, SWITZERLAND, IRELAND, DENMARK, SWEDEN)

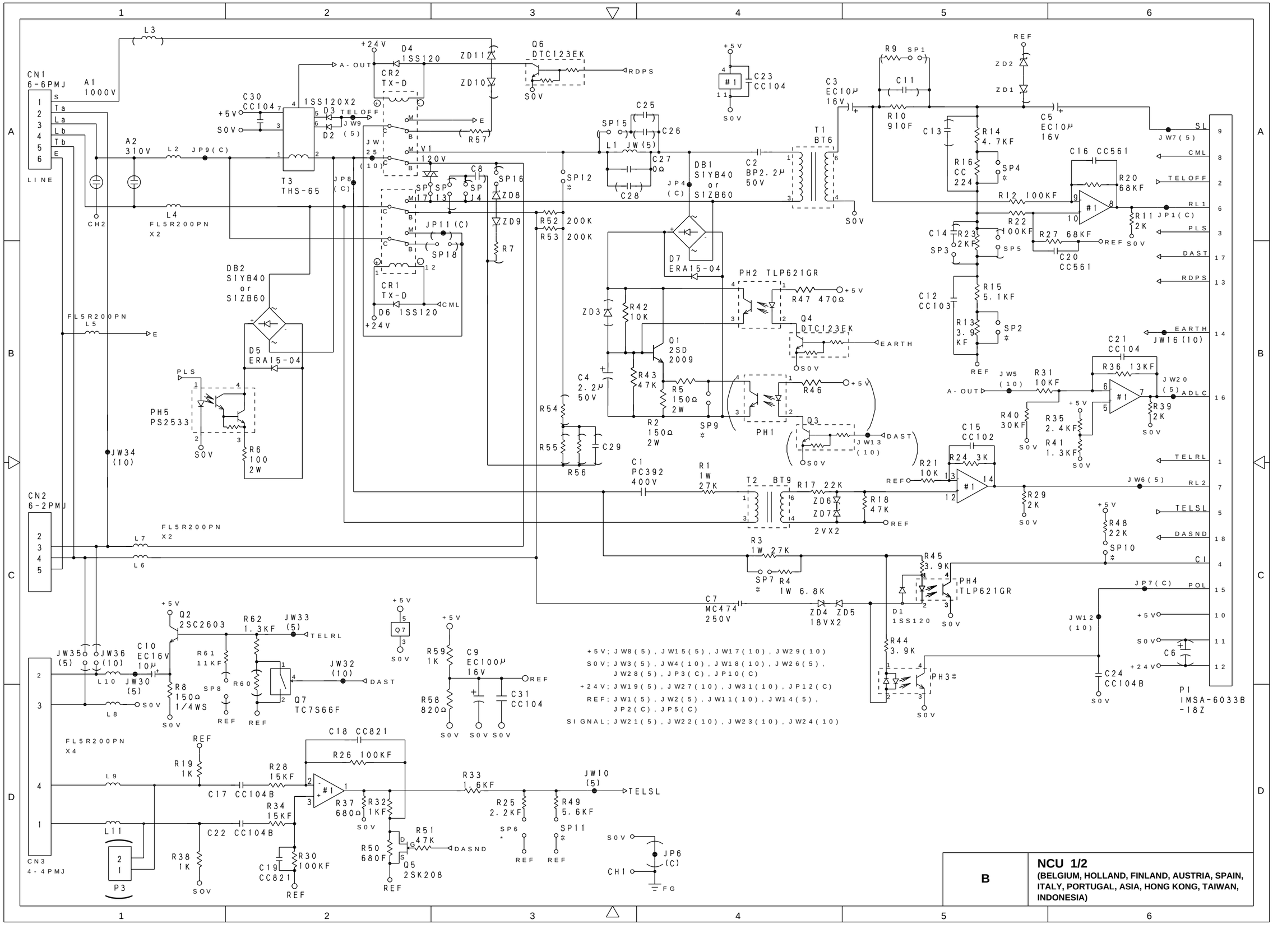

NCU 1/2

(BELGIUM, HOLLAND, FINLAND, AUSTRIA, SPAIN, ITALY, PORTUGAL, ASIA, HONG KONG, TAIWAN, INDONESIA)

B

ITEM	UG6715-0XX NCU363ASSY2AT5 #							UG6716-009 NCU363ASSY2BT5 #
	08 BEL	12 FIN	14 AUS	15 SPA	16 ITA	23 TWN	40 ASA	09 HOL
PH3	-	-	-	-	-	-	-	TLP620GR
SP2	ASSY	ASSY	ASSY	-	-	-	ASSY	ASSY
SP4	ASSY	ASSY	ASSY	-	-	-	ASSY	ASSY
SP6	ASSY	ASSY	-	-	-	-	ASSY	ASSY
SP7	-	-	-	ASSY	-	-	-	-
SP9	ASSY	-	-	ASSY	-	ASSY	ASSY	ASSY
SP10	-	-	-	ASSY	-	-	-	-
SP11	-	-	ASSY	ASSY	ASSY	ASSY	ASSY	ASSY
SP12	-	-	-	-	-	-	-	ASSY

' - ' SHOWS UN- MOUNTI NG

B	**NCU 2/2** **(BELGIUM, HOLLAND, FINLAND, AUSTRIA, SPAIN, ITALY, PORTUGAL, ASIA, HONG KONG, TAIWAN, INDONESIA)**

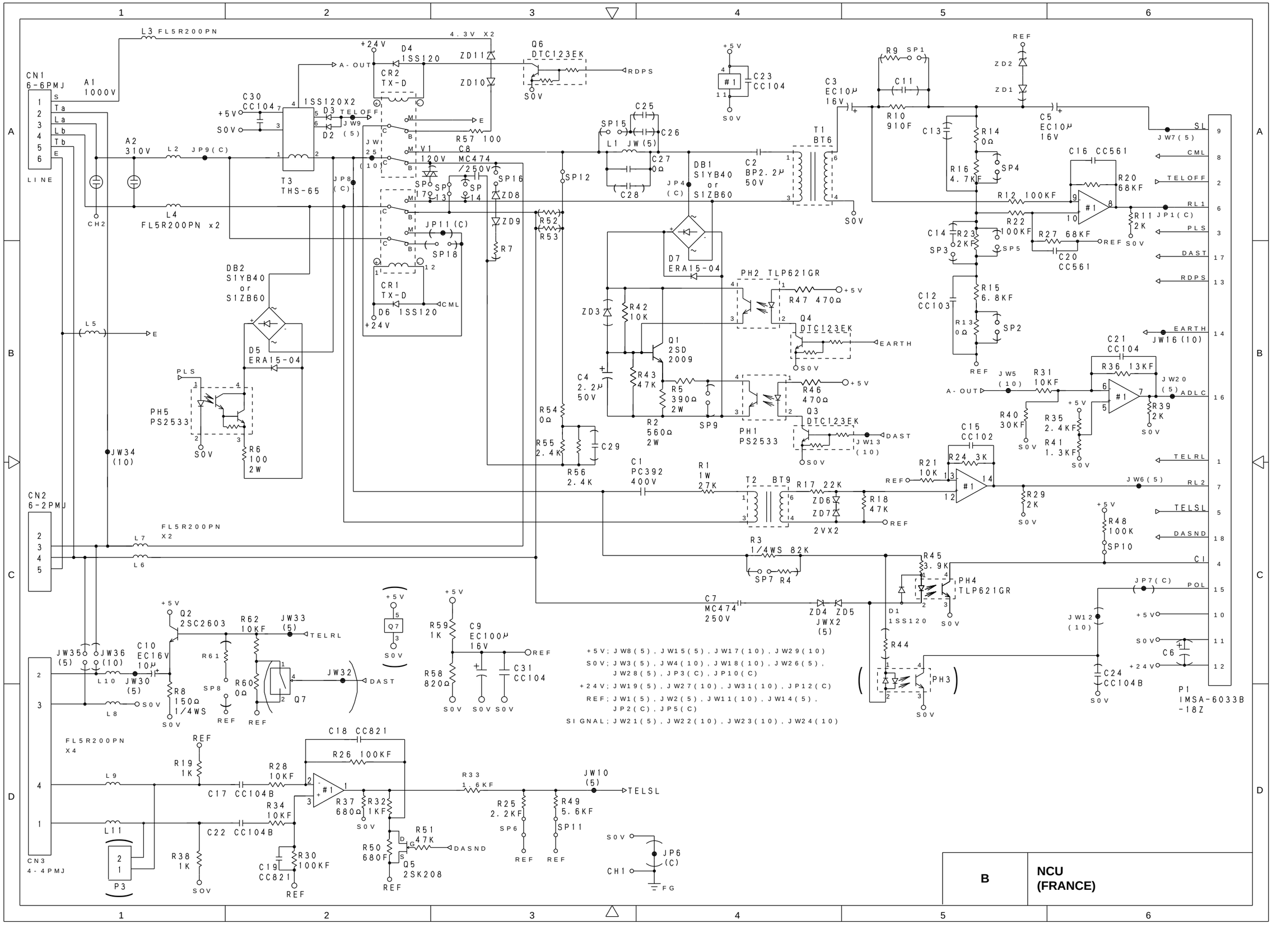
CN1 6-6PMJ
LINE
A1 1000V
A2 310V
CH2
L3 FL5R200PN
L4 FL5R200PN x2
L2
JP9(C)
T3 THS-65
JP8 (C)
4.3V X2
+24V
D4 1SS120
CR2 TX-D
A-OUT
ZD11
ZD10
Q6 DTC123EK
RDPS
S0V
C30 CC104
+5V
S0V
1SS120X2
D3 TELOFF
JW9
D2 (5)
E
R57 100
JW 25 (10)
V1 120V
C8 MC474 /250V
SP15
SP17
SP13
SP14
SP16
ZD8
ZD9
R7
JP11(C)
SP18
CR1 TX-D
D6 1SS120
CML
+24V
SP12
R52
R53
C25
SP15
C26
L1 JW(5)
C27 0Ω
C28
DB1 S1YB40 or S1ZB60
JP4 (C)
C2 BP2.2μ 50V
T1 BT6
S0V
C23 CC104
+5V
#1
S0V
C3 EC10μ 16V
R9 SP1
C11
R10 910F
C5 EC10μ 16V
REF
ZD2
ZD1
C13
R14 0Ω
R16 4.7KF
SP4
C16 CC561
R20 68KF
R12 100KF
R22 100KF
R27 68KF
REF
S0V
C20 CC561
C14
R23 2KF
SP3
SP5
R11 2K
JP1(C)
SL
JW7(5)
CML
TELOFF
RL1
PLS
DAST
RDPS
D7 ERA15-04
PH2 TLP621GR
R47 470Ω
Q4 DTC123EK
EARTH
ZD3
R42 10K
Q1 2SD 2009
R43 47K
R5 390Ω 2W
R2 560Ω 2W
SP9
C4 2.2μ 50V
R54 0Ω
R55 2.4K
R56 2.4K
C29
PH1 PS2533
R46 470Ω
Q3 DTC123EK
JW13 (10)
DAST
C12 CC103
R15 6.8KF
R13 0Ω
SP2
REF
EARTH
JW16(10)
C21 CC104
R36 13KF
JW5 (10)
R31 10KF
A-OUT
JW20 (5)
ADLC
R39 2K
R40 30KF
R35 2.4KF
R41 1.3KF
C15 CC102
R24 3K
R21 10K
REF
TELRL
JW6(5)
RL2
R29 2K
DB2 S1YB40 or S1ZB60
D5 ERA15-04
L5
E
PLS
PH5 PS2533
R6 100 2W
JW34 (10)
C1 PC392 400V
R1 1W 27K
T2 BT9
R17 22K
ZD6
ZD7
2VX2
R18 47K
REF
R3 1/4WS 82K
SP7 R4
C7 MC474 250V
ZD4 ZD5 JWX2 (5)
R45 3.9K
PH4 TLP621GR
D1 1SS120
S0V
R48 100K
SP10
TELSL
DASND
CI
JP7(C)
POL
JW12 (10)
+5V
S0V
C6
+24V
C24 CC104B
P1 IMSA-6033B -18Z
R44
PH3
CN2 6-2PMJ
FL5R200PN X2
L7
L6
+5V
Q2 2SC2603
R62 10KF
JW33 (5)
TELRL
JW35 (5)
JW36 (10)
C10 EC16V 10μ
L10
JW30 (5)
R8 150Ω 1/4WS
L8
R61
SP8
R60 0Ω
REF
Q7
JW32
DAST
+5V
Q7
S0V
+5V
R59 1K
C9 EC100μ 16V
R58 820Ω
REF
C31 CC104
S0V S0V S0V
+5V; JW8(5), JW15(5), JW17(10), JW29(10)
S0V; JW3(5), JW4(10), JW18(10), JW26(5), JW28(5), JP3(C), JP10(C)
+24V; JW19(5), JW27(10), JW31(10), JP12(C)
REF; JW1(5), JW2(5), JW11(10), JW14(5), JP2(C), JP5(C)
SIGNAL; JW21(5), JW22(10), JW23(10), JW24(10)
FL5R200PN X4
L9
L11
C18 CC821
R26 100KF
R19 1K
R28 10KF
C17 CC104B
R34 10KF
C22 CC104B
R38 1K
C19 CC821
R30 100KF
R37 680Ω
R32 1KF
R33 1.6KF
R25 2.2KF
SP6
R49 5.6KF
SP11
JW10 (5)
TELSL
R51 47K
R50 680F
Q5 2SK208
DASND
JP6 (C)
CH1
FG
CN3 4-4PMJ
P3
B
NCU (FRANCE)

+5V：JW8(5)、JW15(5)、JW17(10)、JW29(10)
S0V：JW3(5)、JW4(10)、JW18(10)、JW26(5)、JW28(5)、JP3(C)、JP10(C)
+24V：JW19(5)、JW27(10)、JW31(10)、JP12(C)
REF：JW1(5)、JW2(5)、JW11(10)、JW14(5)、JP2(C)、JP5(C)
SIGNAL：JW21(5)、JW22(10)、JW23(10)、JW24(10)

B	NCU (CHINA, INDIA)

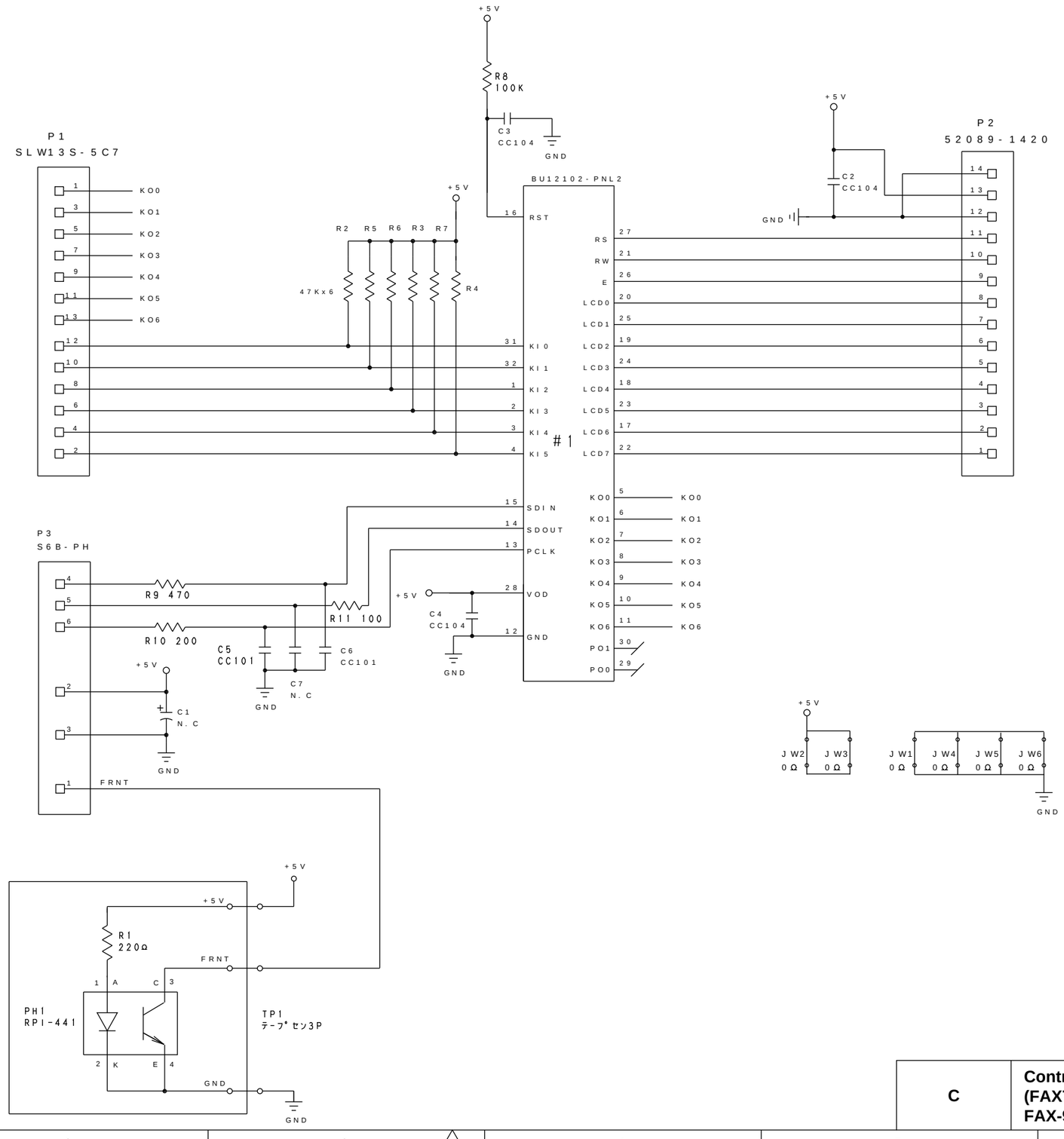

C	**Control Panel 1/2 (FAX750/FAX770/FAX-910/FAX-920/ FAX-921/MFC-925)**

T5-US-PANEL(BASE) KEY MATRIX REFERENCE TABLE 1

KEY NO.	KEY NAME	KEY COE
1	←	06
2	→	0E
3	SET	16
4	MODE	15
5	RESOLUTION	1E
6	HOOK	04
7	10KEY-1	0C
8	10KEY-2	14
9	10KEY-3	1C
10	HOLD	03
11	10KEY-4	0B
12	10KEY-5	13
13	10KEY-6	1B
14	REDIAL/PAUSE	02
15	10KEY-7	0D
16	10KEY-8	0A
17	10KEY-9	12
18	SPPED DIAL	05
19	10KEY-*	01
20	10KEY-0	09
21	10KEY-#	11
22	FUNCTION	36
23	TEL-INDEX	35
24	HELP/Q.SCAN	2E
25	SORT	1D
26	ITOUCH-1	24
27	ITOUCH-2	25
28	ITOUCH-3	2C
29	ITOUCH-4	2D
30	ENLARGE/REDUCE	1A
31	ITOUCH-5	22
32	ITOUCH-6	23
33	ITOUCH-7	2A
34	ITOUCH-8	2B
35	COPY	19
36	STOP	21
37	START	29

T5-US-PANEL(MC/BASE) KEY MATRIX REFERENCE TABLE 2

	KO0 P1-1P	KO1 P1-3P	KO2 P1-5P	KO3 P1-7P	KO4 P1-9P	KO5 P1-11P	KO6 P1-13P
KI0 P1-12P	19	20	21	35	36	37	SW4
KI1 P1-10P	14	16	17	30	31	33	SW1
KI2 P1-8P	10	11	12	13	32	34	SW2
KI3 P1-6P	6	7	8	9	26	28	SW3
KI4 P1-4P	18	15	4	25	27	29	23
KI5 P1-2P	1	2	3	5		24	22

C	**Control Panel 2/2 (FAX750/FAX770/FAX-910/FAX-920/ FAX-921/MFC-925)**

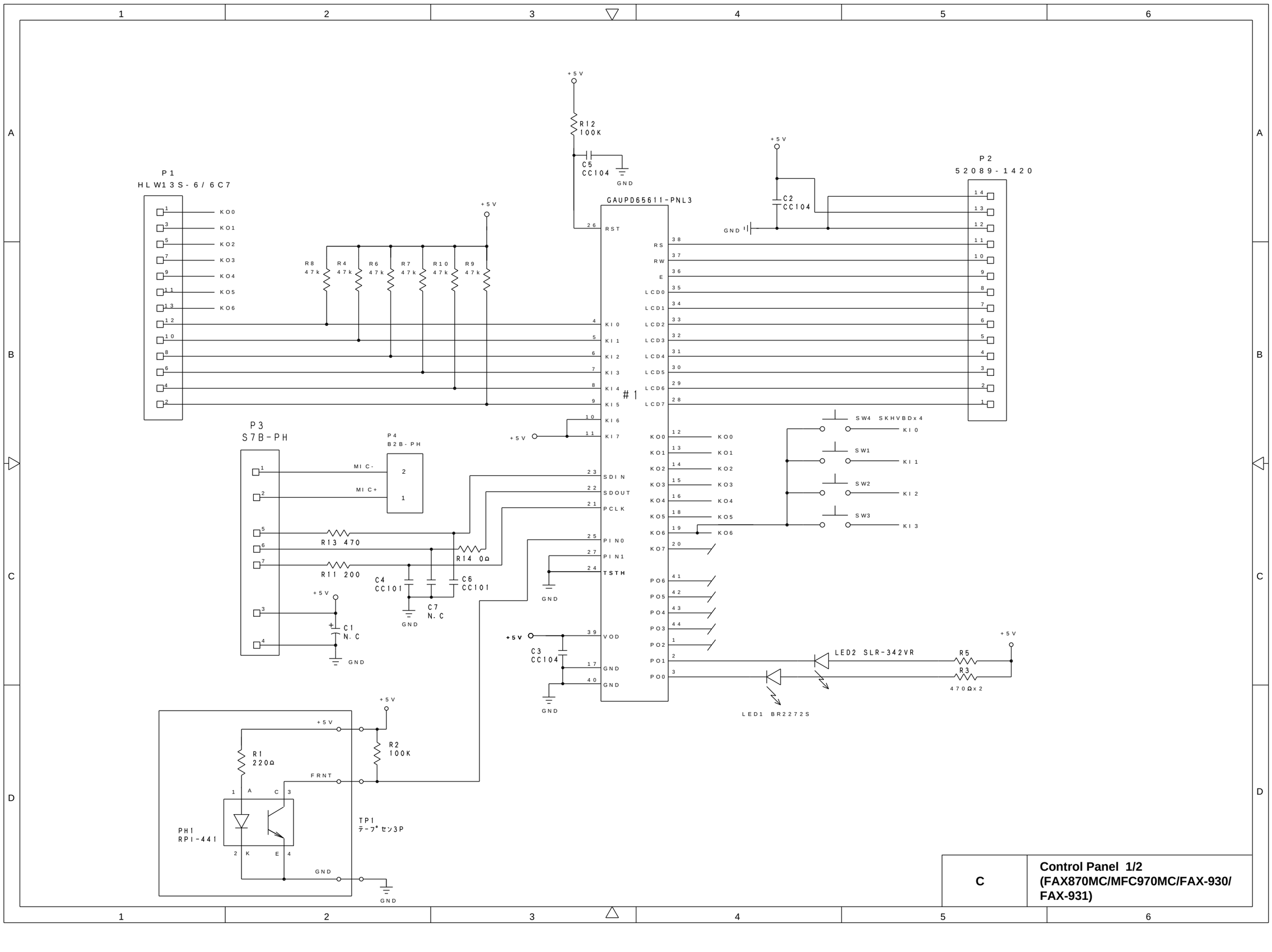

C	**Control Panel 1/2 (FAX870MC/MFC970MC/FAX-930/ FAX-931)**

T5-US-PANEL(MC/BASE) KEY MATRIX REFERENCE TABLE 1

KEY NO.	KEY NAME	KEY COE
1	←	06
2	→	0E
3	SET	16
4	MODE	15
5	RESOLUTION	1E
6	HOLD	04
7	10KEY-1	0C
8	10KEY-2	14
9	10KEY-3	1C
10	REDIAL/PAUSE	03
11	10KEY-4	0B
12	10KEY-5	13
13	10KEY-6	1B
14	SPEED DIAL	02
15	10KEY-7	0D
16	10KEY-8	0A
17	10KEY-9	12
18	SPEAKER PHONE	05
19	10KEY-*	01
20	10KEY-0	09
21	10KEY-#	11
22	FUNCTION	36
23	TEL-INDEX	35
24	HELP/Q.SCAN	2E
25	SORT	1D
26	1TOUCH-1	24
27	1TOUCH-2	25
28	1TOUCH-3	2C
29	1TOUCH-4	2D
30	ENLARGE/REDUCE	1A
31	1TOUCH-5	22
32	1TOUCH-6	23
33	1TOUCH-7	2A
34	1TOUCH-8	2B
35	COPY	19
36	STOP	21

KEY NO.	KEY NAME	KEY COE
37	START	29
SW1	AUTO RECIEVE	32
SW2	PLAY	33
SW3	ERASE	34
SW4	RECORD	31

T5-US-PANEL(MC/BASE) KEY MATRIX REFERENCE TABLE 2

	KO0 P1-1P	KO1 P1-3P	KO2 P1-5P	KO3 P1-7P	KO4 P1-9P	KO5 P1-11P	KO6 P1-13P
KI0 P1-12P	19	20	21	35	36	37	SW4
KI1 P1-10P	14	16	17	30	31	33	SW1
KI2 P1-8P	10	11	12	13	32	34	SW2
KI3 P1-6P	6	7	8	9	26	28	SW3
KI4 P1-4P	18	15	4	25	27	29	23
KI5 P1-2P	1	2	3	5		24	22

C	**Control Panel 2/2 (FAX870MC/MFC970MC/FAX-930/ FAX-931)**

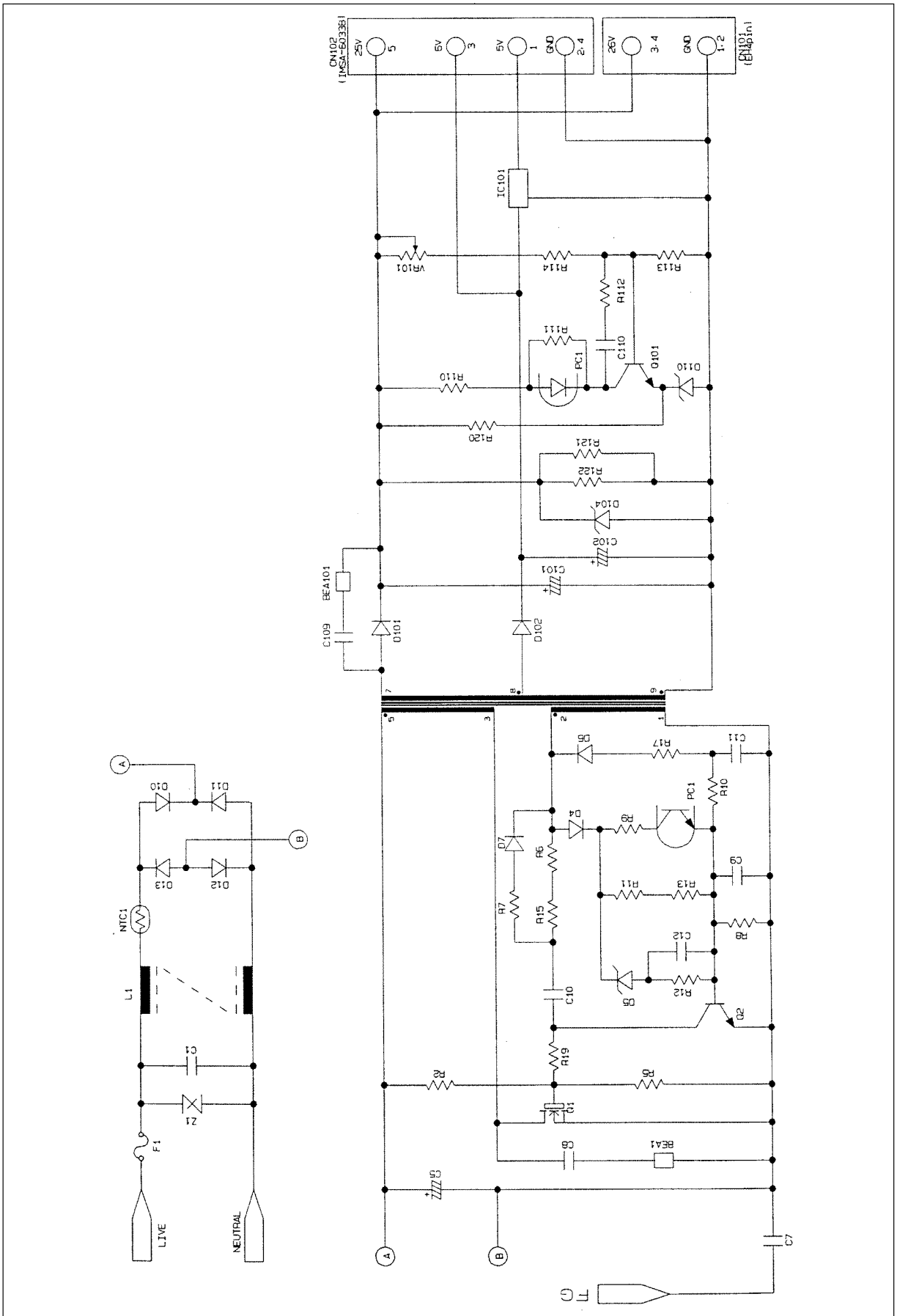

D	**Power supply 100-120V**

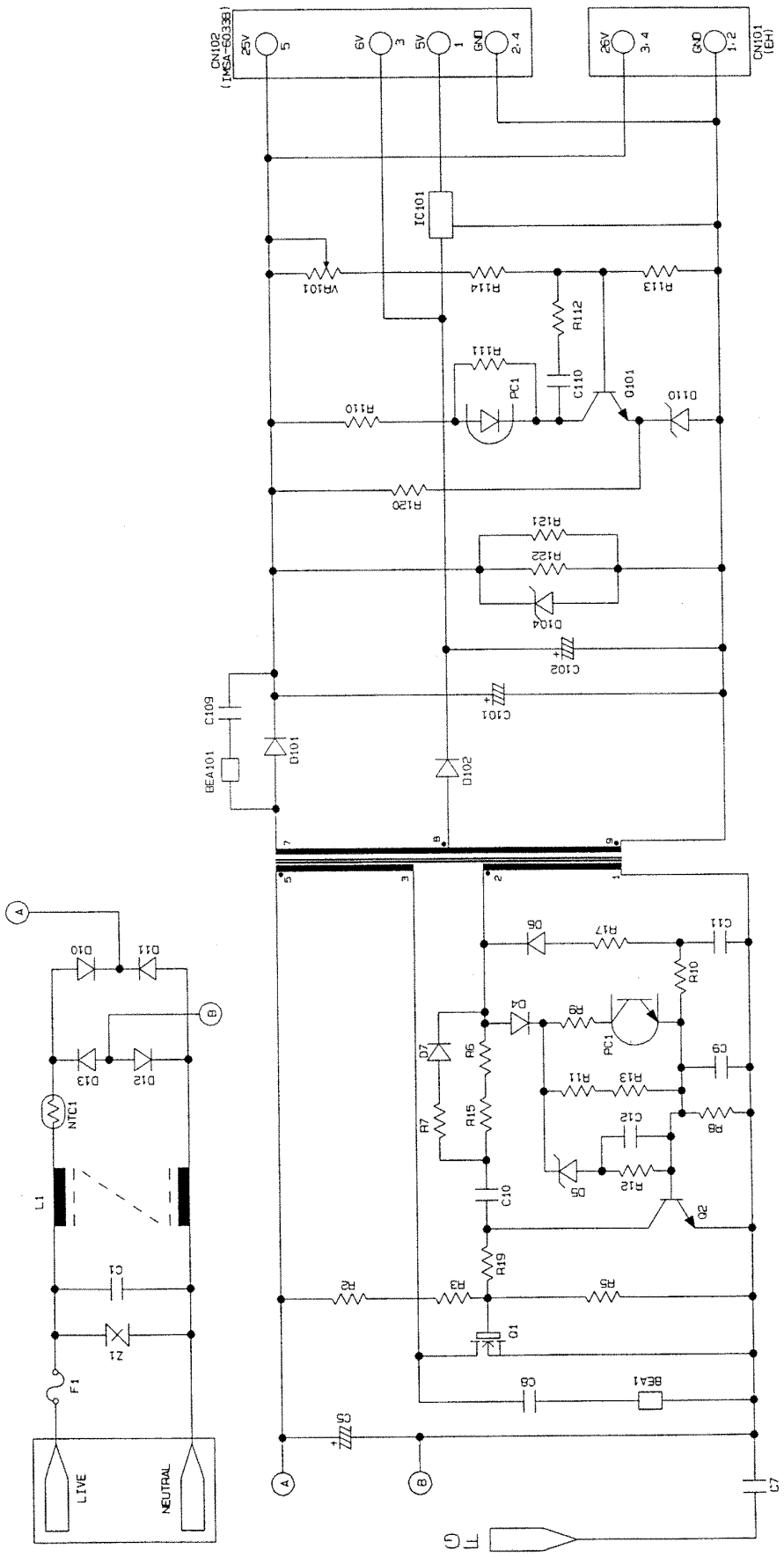

D	**Power supply 200-240V**

FAX750/FAX770/FAX870MC
FAX-910/FAX-920/FAX-921/FAX-930/FAX-931
MFC-925/MFC970MC

Appendix 2. Circuit Diagrams

A. Main PCB
B. Network Control Unit (NCU) PCB
C. Control Panel PCB
D. Power Supply PCB

1. * OF EACH PART SHOWS UN-MOUNTING.
2. ◇:REFER TO UG6640000(T5 LE MAIN #5)

L12 L102B
GND FG

Q5
RH5VA43
VCC
OUT
GND
+5V
R62
1.5K
C53
CC104
GND
RSTL 16A,47B

#5
T7D96
RST 45
RSTL 16A,47B

26D RAS R71 100 RAS0 70
26D CAS R70 100 CAS 74
26D,27A RMRD R95 100 MEMRD 83
26D RMWE MEMWR 84
27B ROMC R93 100 ROMC 85
IORD 46
IOWR 47

+25V +5V
PANEL
1 6 2 3 4 7 5
P9 ◇
R39
100K
R37 270
R31 470
R38 100Ω
C28 * C27 * C26 * C25 CC101
GND

25B EPDO EEDAT 134
25B EPCK EECLK 135
PCLK 137
SDIN 138
SDOUT 139
FRNT SEN1 128
37C REAR SEN2 129
37D CSEN SEN3 130
37A FSEN SEN4 131
37B RSEN SEN5 132
37C RIBN SEN6 133

32A TG 8
CL1 9
CL2 10
32A RB RDCK1 11
RDCK2 12
33C CLMP RDCLP 13
33B LIGT R63 10K PWMLED 14
33C CPWM PWMCLP 15
C55 CC104
GND

32E ST1 95
32E ST2 94
32E HDC 93
32E DOUT 92
32E DIN 89
32F LATC 88
35E PWON 87
GND R64 * PIO5 25
PIO6 86
PIO7 104
41F DAST R88 PWM4 143
C78 ◇
GND

RTCCON 27 RSTL 14A
RVDD 28 RVDD
REXT 30
RXT 29
CK1HZ 26
XT1
C-001R
C56 CC15P C67 CC15P
GND

TXD 3 TXD
RXD 4 RXD
CTS 5 CTS
RTS 6 RTS
CRXD 7 CRXD
PBUS 17B

SOL 16 SOL 23F
PM1 17 MM1
PM2 20 MM2
PM3 21 MM3
PM4 22 MM4
MTI0 23 MTI0
MTI1 24 MTI1
MBUS 23C

D0 75 D0
D1 76 D1
D2 77 D2
D3 78 D3
D4 79 D4
D5 80 D5
D6 81 D6
D7 82 D7
DBUS 26E

A0 48 A0
A1 49 A1
A2 50 A2
A3 51 A3
A4 52 A4
A5 53 A5
A6 56 A6
A7 57 A7
A8 58 A8
A9 59 A9
A10 60 A10
A11 61 A11
A12 62 A12
A13 63 A13
A14 65 A14
A15 66 A15
A16 67 A16
A17 68 A17
A18 69 A18
ABUS 26E

TST1 42 L5V
TST2 43

+5V
L5 L102B
16B PBUS
RTS L8 L102B
TXD L6 L102B
RXD L7 L102B
CTS L9 L102B
CRXD L10 L102B
GND
PCI
P6
B8B-PH
WHITE
1 6 3 5 7 8 2 4

#5
T7D96

42F DASND PWMSND 103
43D DAREC PWMREC 102
R54 ◇
R55 10K
R90 *
C45 CC104 C39 ◇
GND

47E SPON SPON 140
46E VOL1 VOL1(OD) 141
46E VOL2 VOL2(OD) 142
46E VOL3 VOL3(OD) 144
35F,43C CMLH CML 119
43A TELL TEL 120
46D RNGL RNGL 121
45E RNGO RING 122
43E PLS PLS 101
42E RDPS DPS 100
42E EAT EAT 99
42D OTO OTO 123
45A HRAD HRAD(OD) 124
45B FOGM FOGM(OD) 125
37E HOOK HOOK 127
42F CI CI 98
42F TLOF TLOF 97
42F TLO2 TLOF2 96

DPDMCK 110 200X3 R51 DMK
APDMCK 111 R53 AMK
DPDMDT 112 R52 DMT
APDMDT 113 AMT
C3 114 C3
C4 115 C4
C5 117 C5
MUTE 118 MUT
TBUS 48B

MEXTL 106
MTXL 108
MCLK 105
XT2
20.736MHZ
R91 150Ω
R56 150Ω
C43 CC10P C44 CC20P
GND

+25V
C40 ◇
R57 75K
R58 10KF C48 CC104
GND GND

42F ADLC CMPLC 32
32B VID CMPRD 35
CMPTH 34
32D CP3I CMPVL 33
CPNN 36
38
+5V AVDD 37
39
REFH
40
REFL
+5V R59 75F
R60 100F
R61 75F
C50 CC104 C51 CC104
GND
AGND 31
41
C65 CC104 C49 CC104
GND

VDD 2 18 54 72 90 109 126
VSS 1 19 44 55 64 73 91 107 116 136

+5V
L3 * L11 *
L5V
C38 CC104 C41 CC104 C42 CC104 C46 CC104 C47 CC104 C52 CC104 C54 CC104 C64 CC104
GND

+5V
D1
MA700
RVDD
R81 1K
C68 CC104
C3 ◇
GND

A	**Main PCB 1/5 (FAX750/FAX770/FAX-910/ FAX-920/FAX-921/MFC-925)**

1. * OF EACH PART SHOWS UN-MOUNTING.
2. ◇:REFER TO UG6640000(T5 LE MAIN #5)

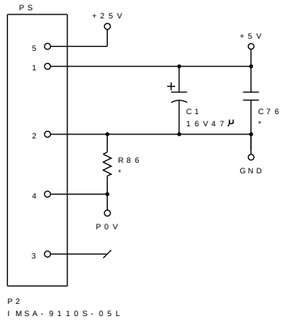

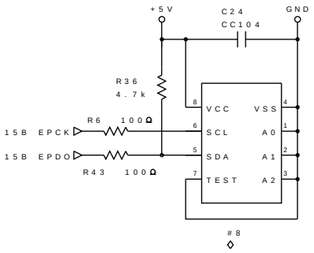

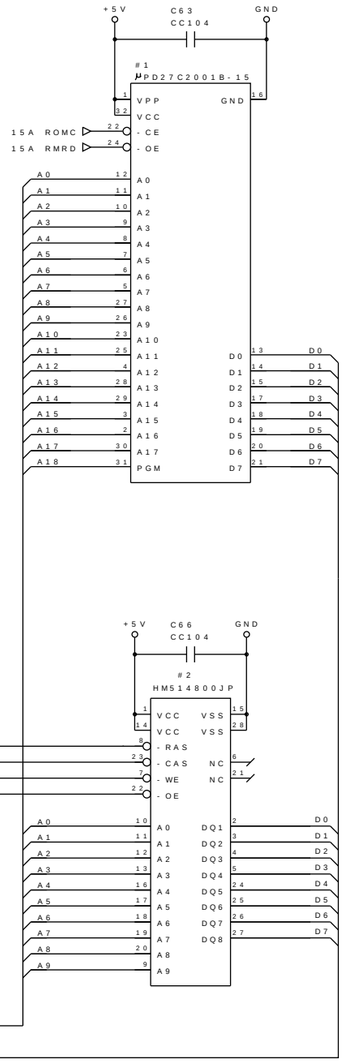

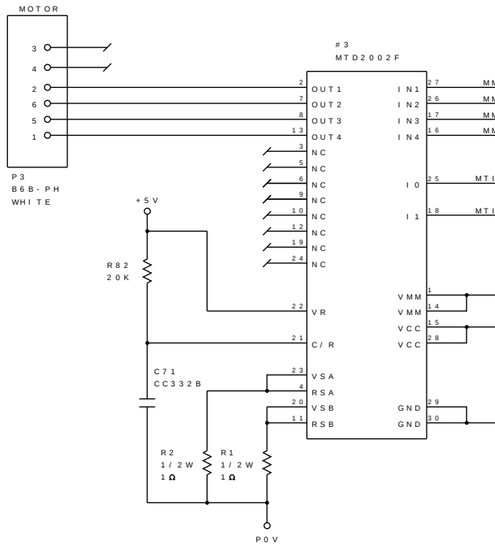

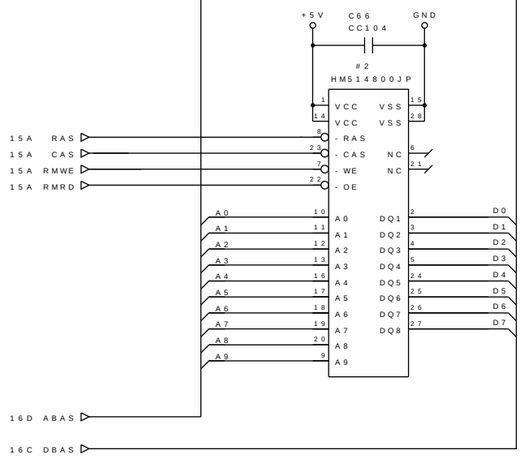

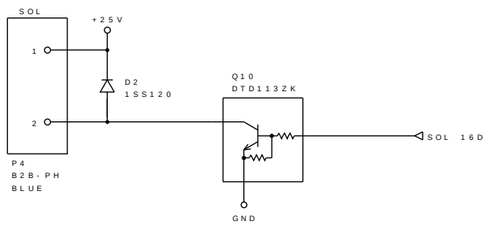

A	**Main PCB 2/5 (FAX750/FAX770/FAX-910/ FAX-920/FAX-921/MFC-925)**

1. * OF EACH PART SHOWS UN-MOUNTING.
2. ◇:REFER TO UG6640000(T5 LE MAIN #5)

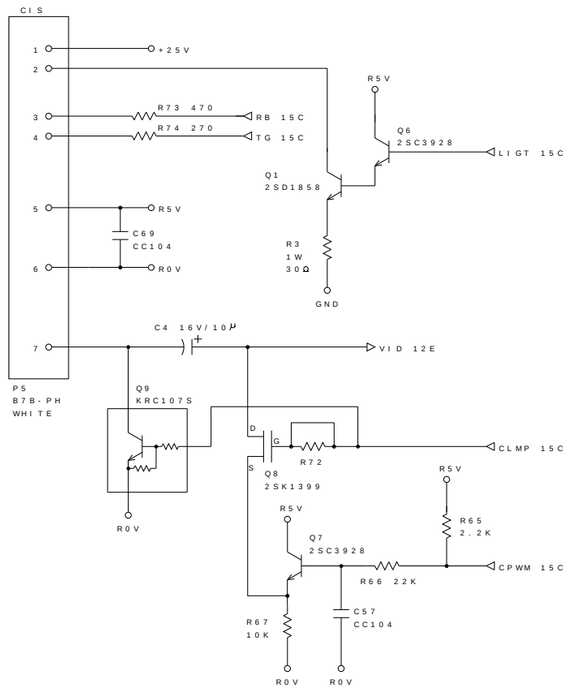

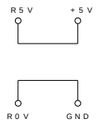

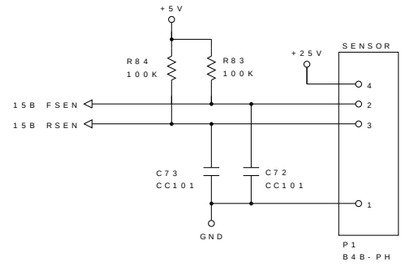

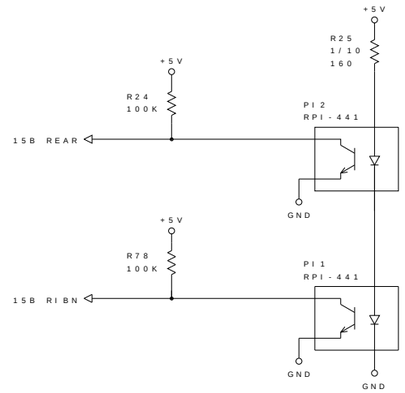

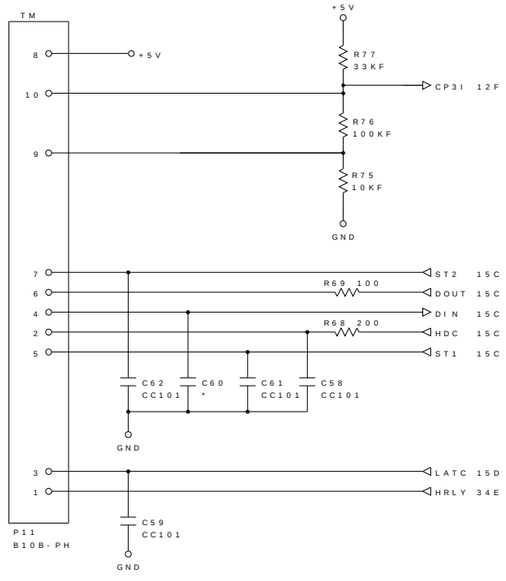

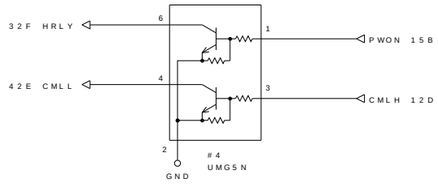

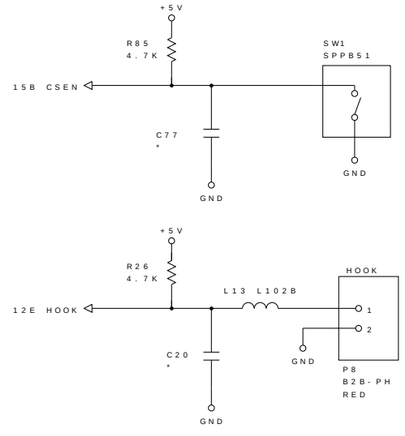

A	**Main PCB 3/5 (FAX750/FAX770/FAX-910/ FAX-920/FAX-921/MFC-925)**

1. * OF EACH PART SHOWS UN-MOUNTING.
2. ◇:REFER TO UG6640000(T5 LE MAIN #5)

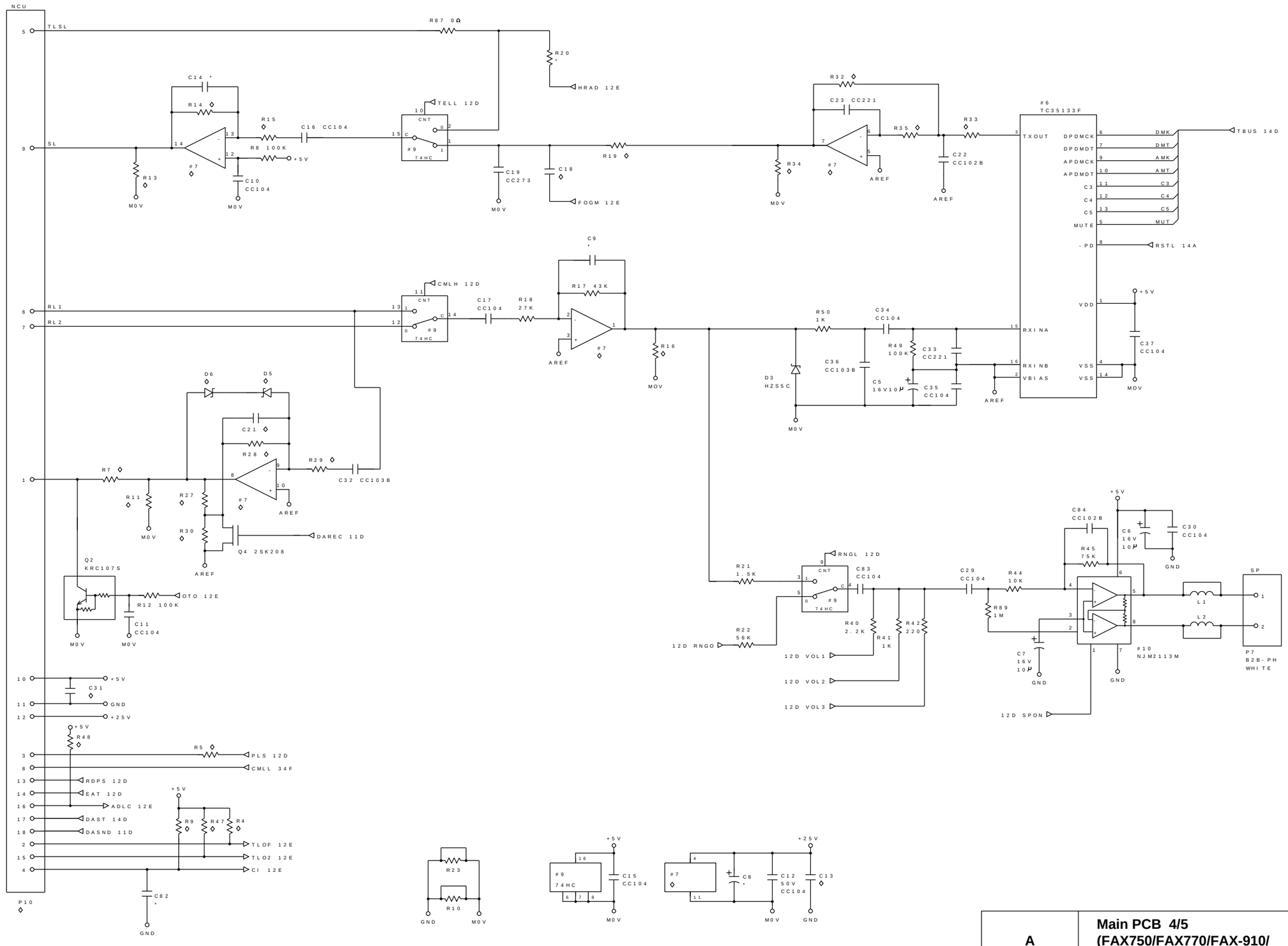

A	**Main PCB 4/5 (FAX750/FAX770/FAX-910/ FAX-920/FAX-921/MFC-925)**

		US	EUR(21)	EUR(22)						
		S.ASSY 01	S.ASSY 21	S.ASSY 22						
		UG6628001 MAIN PCB	UG6686021 MAIN PCB	UG6686022 MAIN PCB						
PAGE	NO.									
1	P9	B6B-PH RED	B6B-PH RED	B6B-PH RED						
	R54	-	10KΩ	10KΩ						
	R88	-	10KΩ	10KΩ						
	C3	EC 5.5B473	EC 5.5B473	EC 5.5B224						
	C39	-	CC104	CC104						
	C40	-	-	-						
	C78	-	CC104	CC104						
2	#8	EEP16KSER	EEP16KSER	EEP16KSER						
3										
4	#7	KI324	KI324	KI324						
	P10	IMSA-9110S-12L	IMSA-9110S-18L	IMSA-9110S-18L						
	D5	HZU2.0B	UDZ2.7B	UDZ2.7B						
	D6	HZU2.0B	UDZ2.7B	UDZ2.7B						
	R4	1KΩ	22KΩ	22KΩ						
	R5	1KΩ	680Ω	680Ω						
	R7	1.5KΩ	1.5KΩ(F)	1.5KΩ(F)						
	R9	22KΩ	120KΩ	120KΩ						
	R11	4.7KΩ	680Ω	680Ω						
	R13	1/10W 1KΩ	1/10W 1KΩ	1/10W 1KΩ						
	R14	56KΩ	56KΩ(F)	56KΩ(F)						
	R15	10KΩ(F)	7.5KΩ(F)	7.5KΩ(F)						
	R16	4.7KΩ	1KΩ	1KΩ						
	R19	1.5KΩ	1.5KΩ(F)	1.5KΩ(F)						
	R27	1KΩ	1KΩ(F)	1KΩ(F)						
	R28	100KΩ	39KΩ(F)	39KΩ(F)						
	R29	200KΩ	130KΩ(F)	130KΩ(F)						
	R30	2.2KΩ	680Ω(F)	680Ω(F)						
	R32	75KΩ	75KΩ(F)	75KΩ(F)						
	R33	56KΩ	56KΩ(F)	56KΩ(F)						
	R34	4.7KΩ	4.7KΩ	4.7KΩ						
	R35	56KΩ	56KΩ(F)	56KΩ(F)						
	R47	22KΩ	180KΩ	180KΩ						
	R48	10KΩ	-	-						
	C13	-	-	-						
	C18	-	CC105	-						
	C21	CC102B	CC681B	CC681B						
	C31	-	-	-						

"-" SHOWS UN-MOUNTING

A	**Main PCB 5/5 (FAX750/FAX770/FAX-910/ FAX-920/FAX-921/MFC-925)**

1. * OF EACH PART SHOWS UN-MOUNTING.
2. ◇:REFER TO UG6663000(T5 MC MAIN #6)

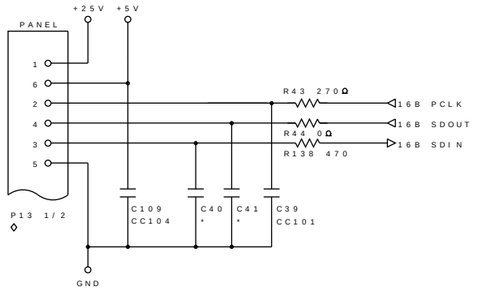

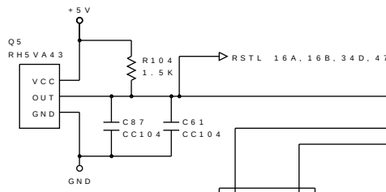

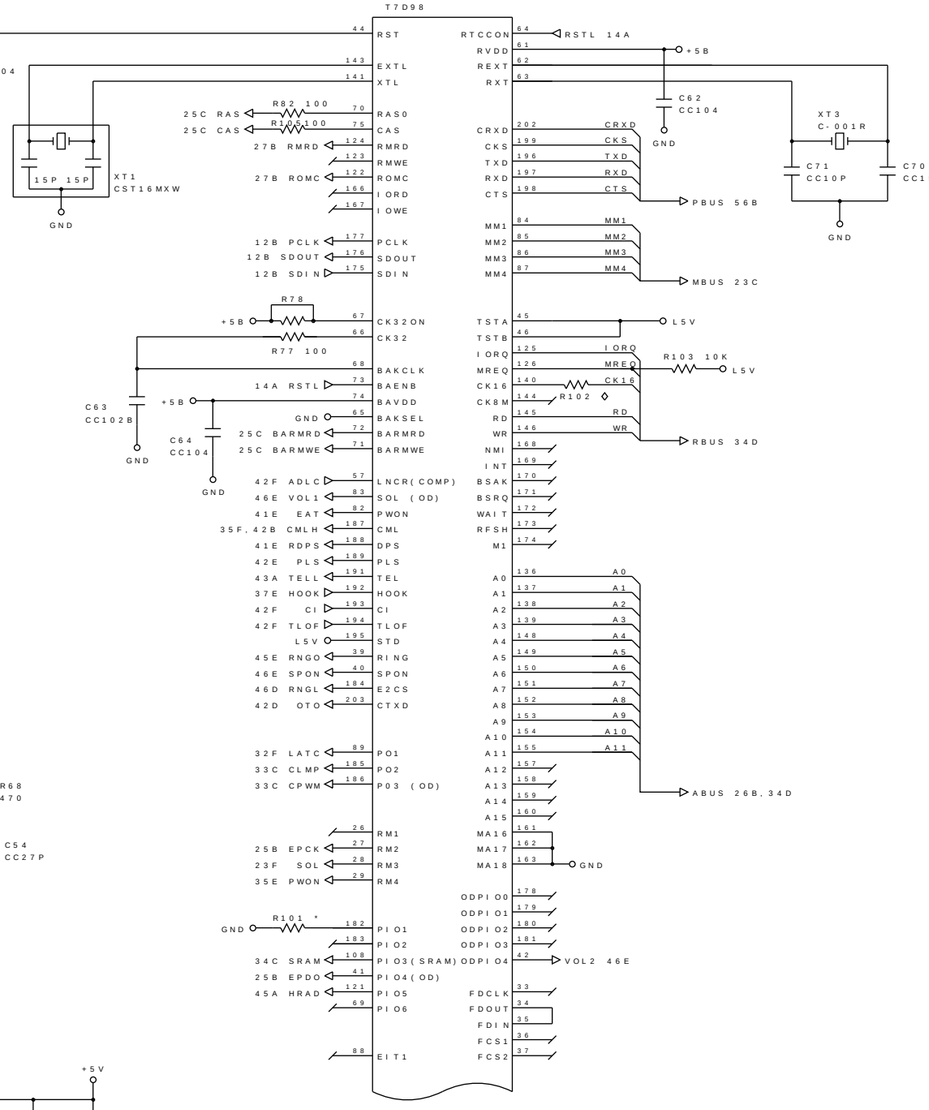

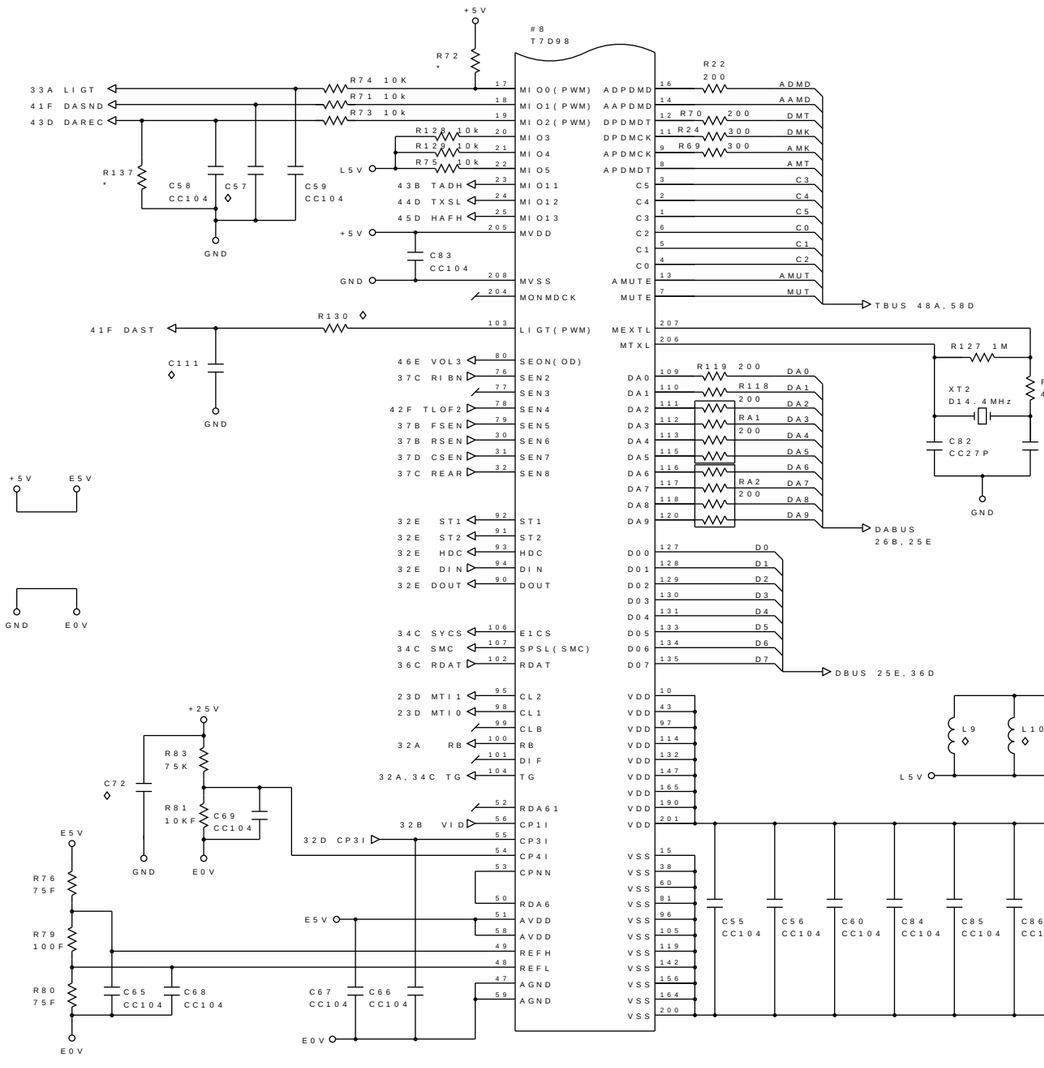

A	**Main PCB 1/6 (FAX870MC/MFC970MC/FAX-930/ FAX-931)**

1. * OF EACH PART SHOWS UN-MOUNTING.
2. ◇:REFER TO UG6663000(T5 MC MAIN #6)

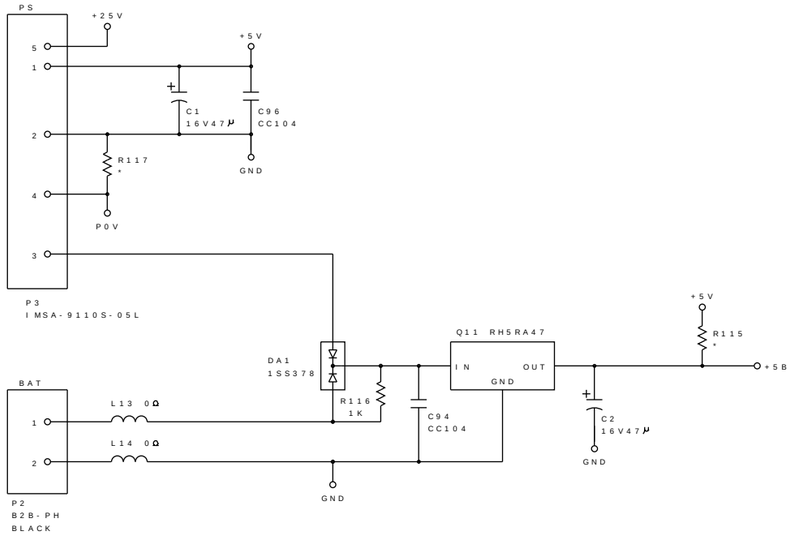

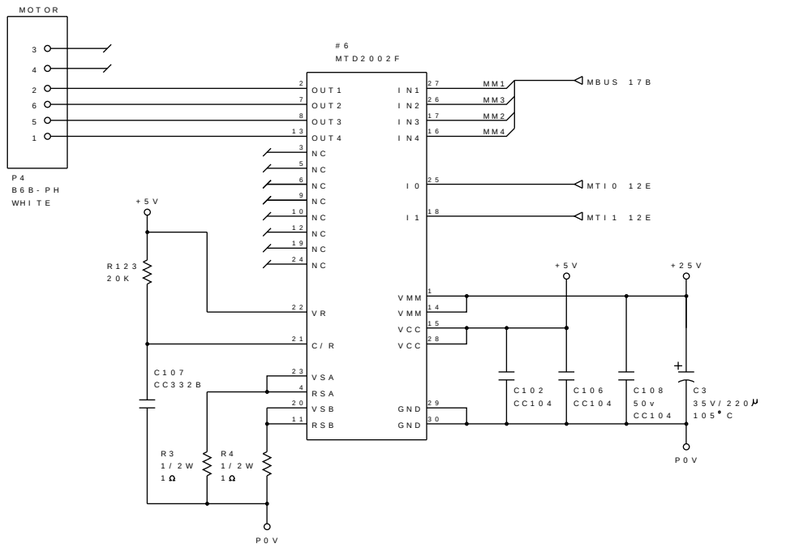

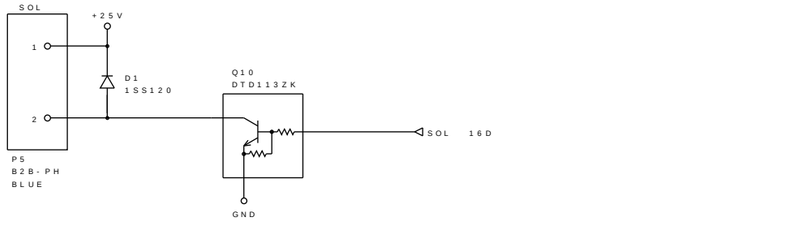

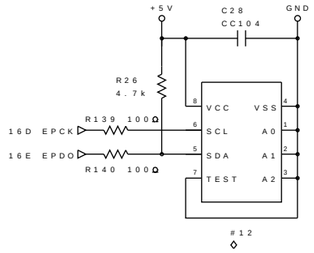

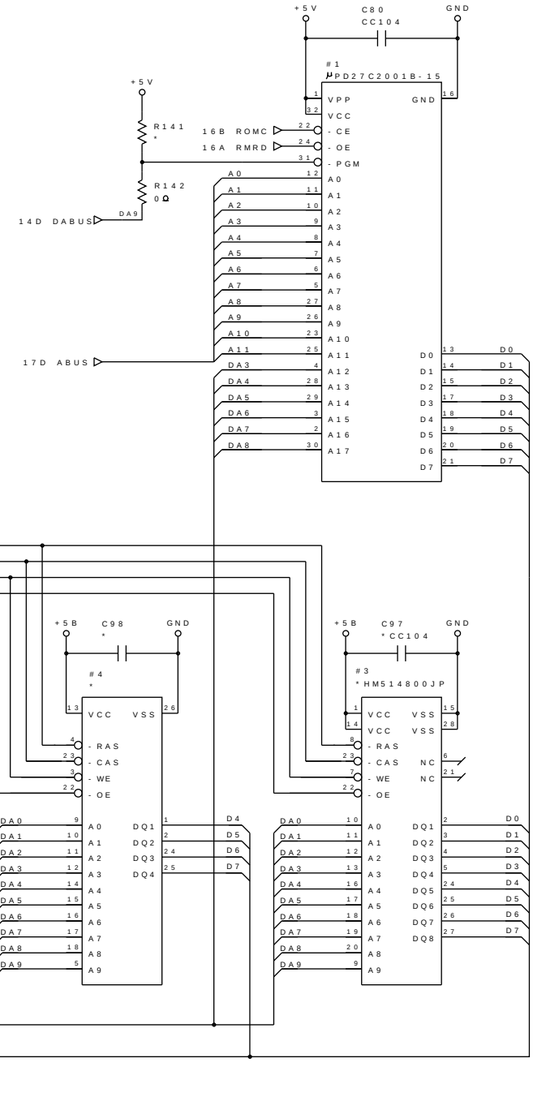

A	**Main PCB 2/6 (FAX870MC/MFC970MC/FAX-930/ FAX-931)**

1. * OF EACH PART SHOWS UN-MOUNTING.
2. ◇:REFER TO UG6663000(T5 MC MAIN #6)

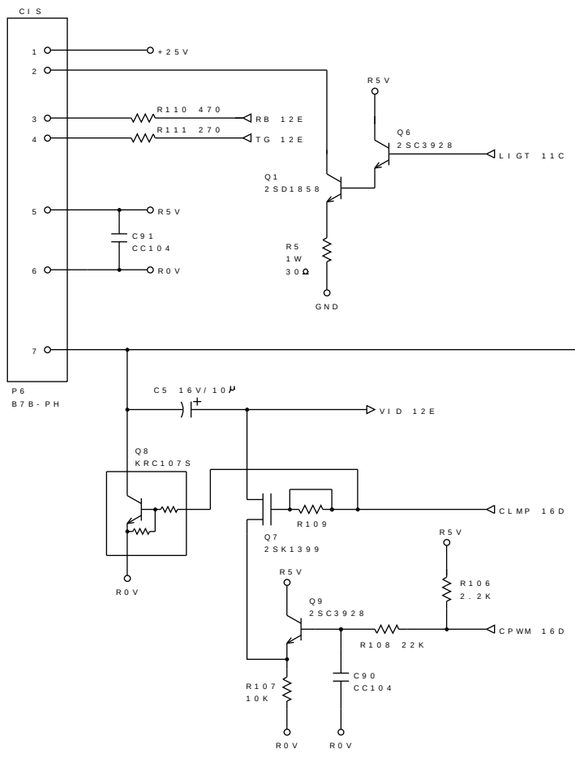

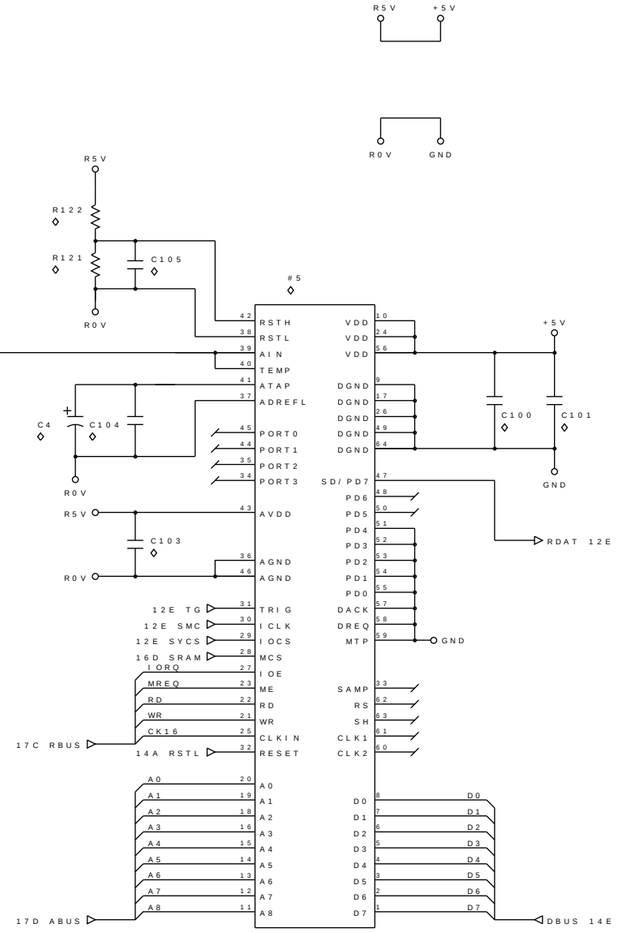

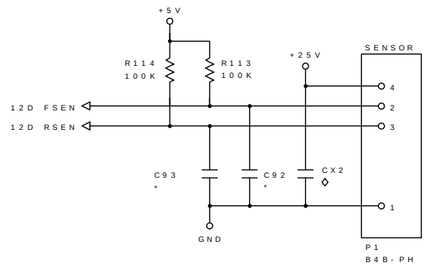

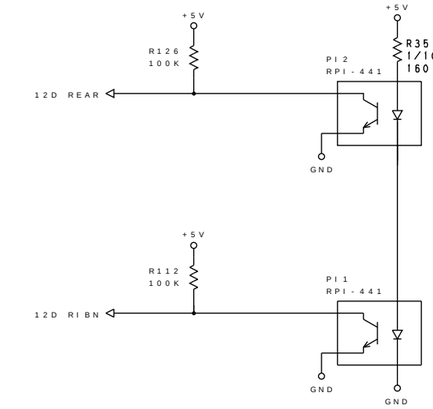

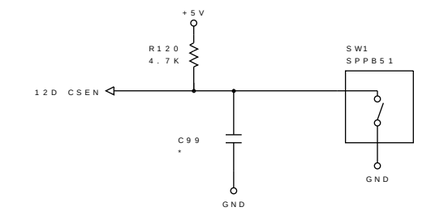

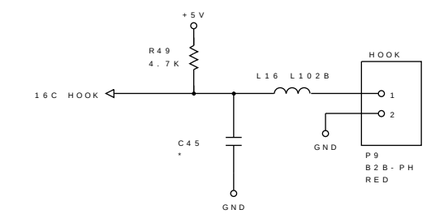

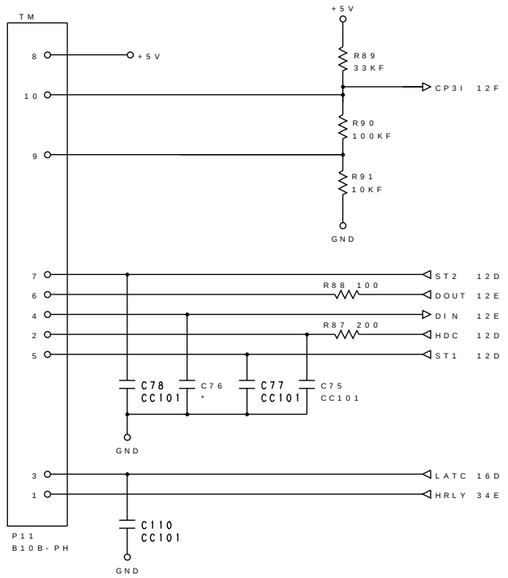

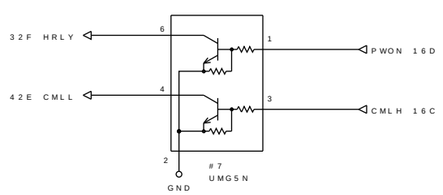

A

Main PCB 3/6 (FAX870MC/MFC970MC/FAX-930/ FAX-931)

1. * OF EACH PART SHOWS UN-MOUNTING.
2. ◇:REFER TO UG6663000(T3 MC MAIN #6)

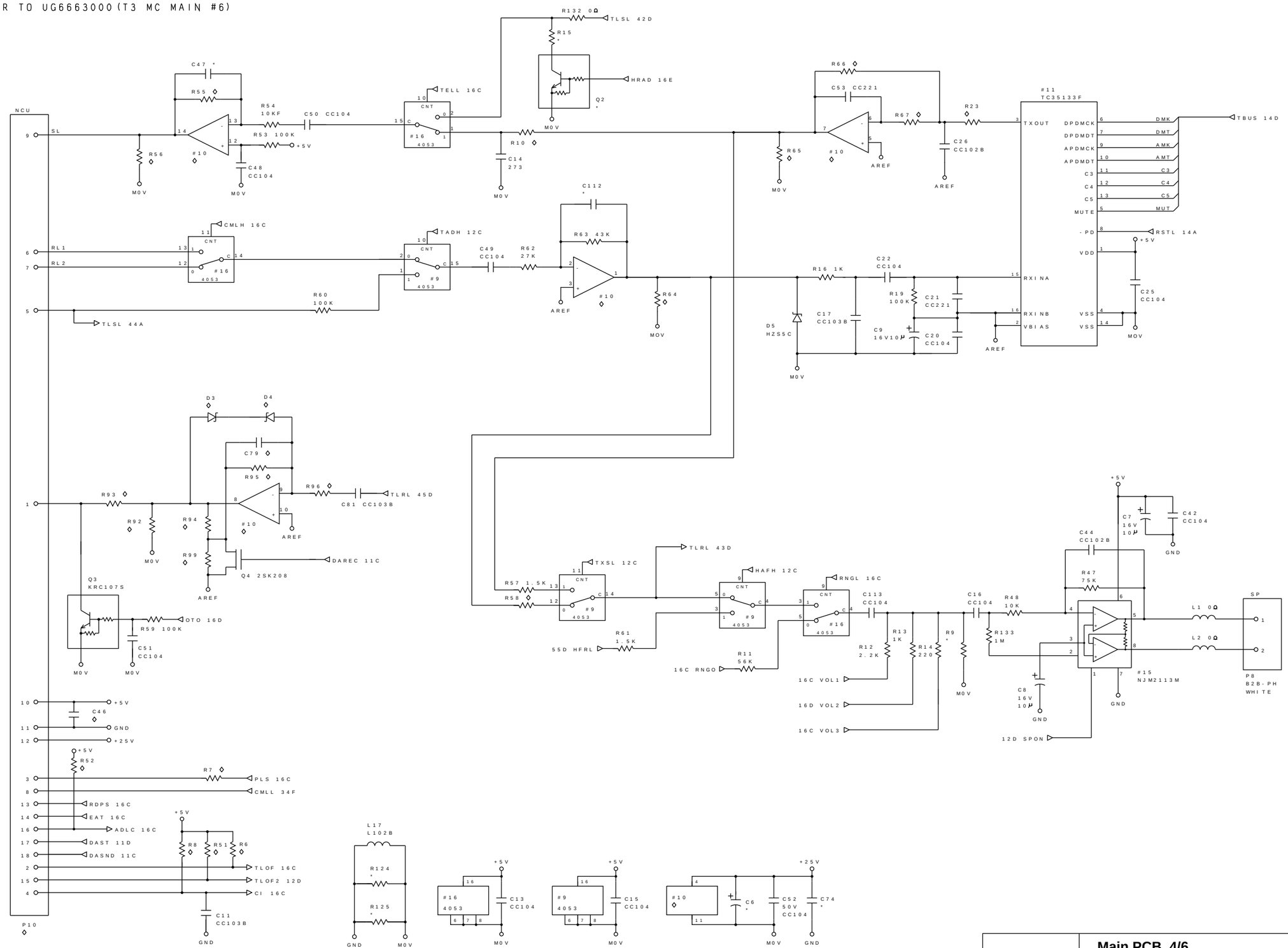

A	**Main PCB 4/6 (FAX870MC/MFC970MC/FAX-930/ FAX-931)**

1. * OF EACH PART SHOWS UN-MOUNTING.
2. ◇:REFER TO UG6663000 (T5 MC MAIN #6)

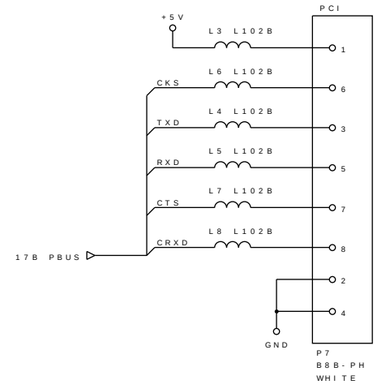

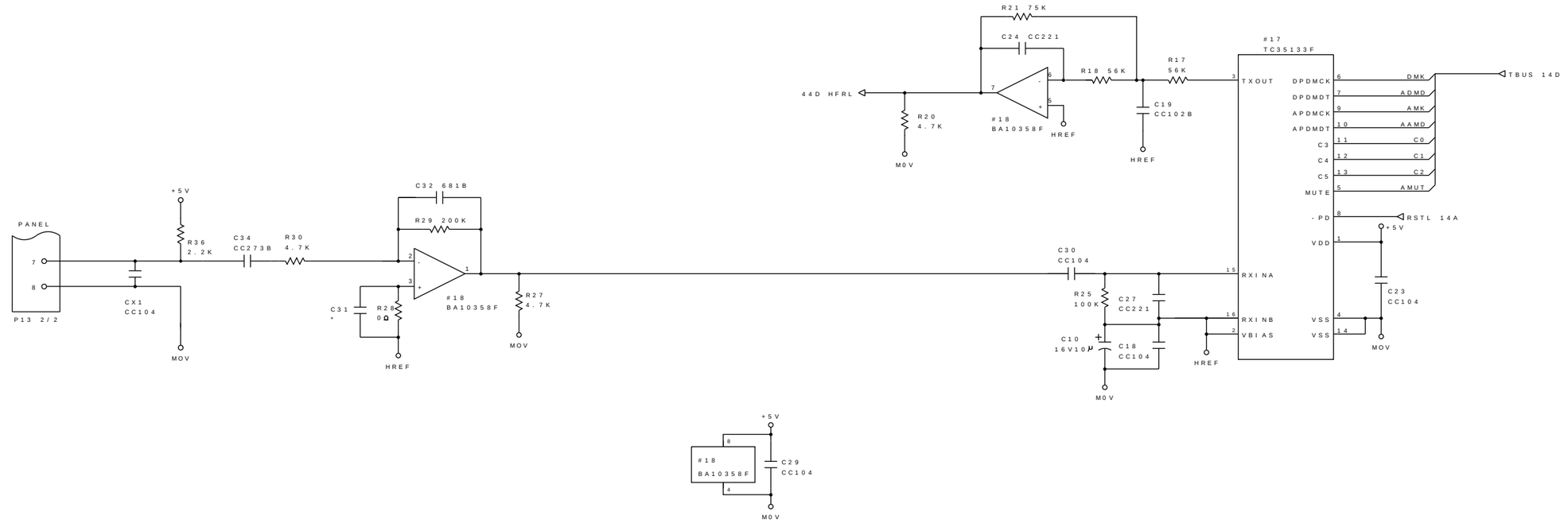

A	**Main PCB 5/6 (FAX870MC/MFC970MC/FAX-930/ FAX-931)**

		US	EUR							
		S.ASSY 11	S.ASSY 31							
		UG6655011 MAIN PCB	UG6687031 MAIN PCB							
PAGE	NO.									
1	P13	B7B-PH BLUE	B7B-PH BLUE							
	R102	-	-							
	R130	10KΩ	10KΩ							
	C57	0Ω	CC104							
	C72	-	-							
	C111	CC104	CC104							
	L9	0Ω	0Ω							
	L10	0Ω	0Ω							
	L11	0Ω	0Ω							
2	#12	EEP16KSER	EEP16KSER							
3	#5	-	-							
	R121	-	-							
	R122	-	-							
	C4	-	-							
	C100	-	-							
	C101	-	-							
	C103	-	-							
	C104	-	-							
	C105	-	-							
	CX2	-	-							
4	#10 P10	KI324 IMSA-9110S-12L	KI324 IMSA-9110S-18L							
	D3, D4	ZDHZU-2.0B	ZDHZU-2.7B							
	R6	1KΩ	22KΩ							
	R7	1KΩ	680Ω							
	R8	22KΩ	120KΩ							
	R10	1.5KΩ	1.5KΩ(F)							
	R23	56KΩ	56KΩ(F)							
	R51	22KΩ	180KΩ							
	R52	10KΩ	-							
	R55	56KΩ	56KΩ(F)							
	R56	1/10W 1KΩ	1/10W 1KΩ							
	R58	1.5KΩ	1.5KΩ(F)							
	R64	4.7KΩ	1KΩ							
	R65	4.7KΩ	4.7KΩ							
	R66	75KΩ	75KΩ(F)							
	R67	56KΩ	56KΩ(F)							
	R92	4.7KΩ	680Ω							
	R93	1.5KΩ	1.5KΩ(F)							
	R94	1KΩ	1KΩ(F)							
	R95	100KΩ	39KΩ(F)							
	R96	300KΩ	200KΩ(F)							
	R99	2.2KΩ	680Ω(F)							
	C46	-	-							
	C79	CC102B	CC681B							
5										

"-" SHOWS UN-MOUNTING

A	**Main PCB 6/6 (FAX870MC/MFC970MC/FAX-930/ FAX-931)**

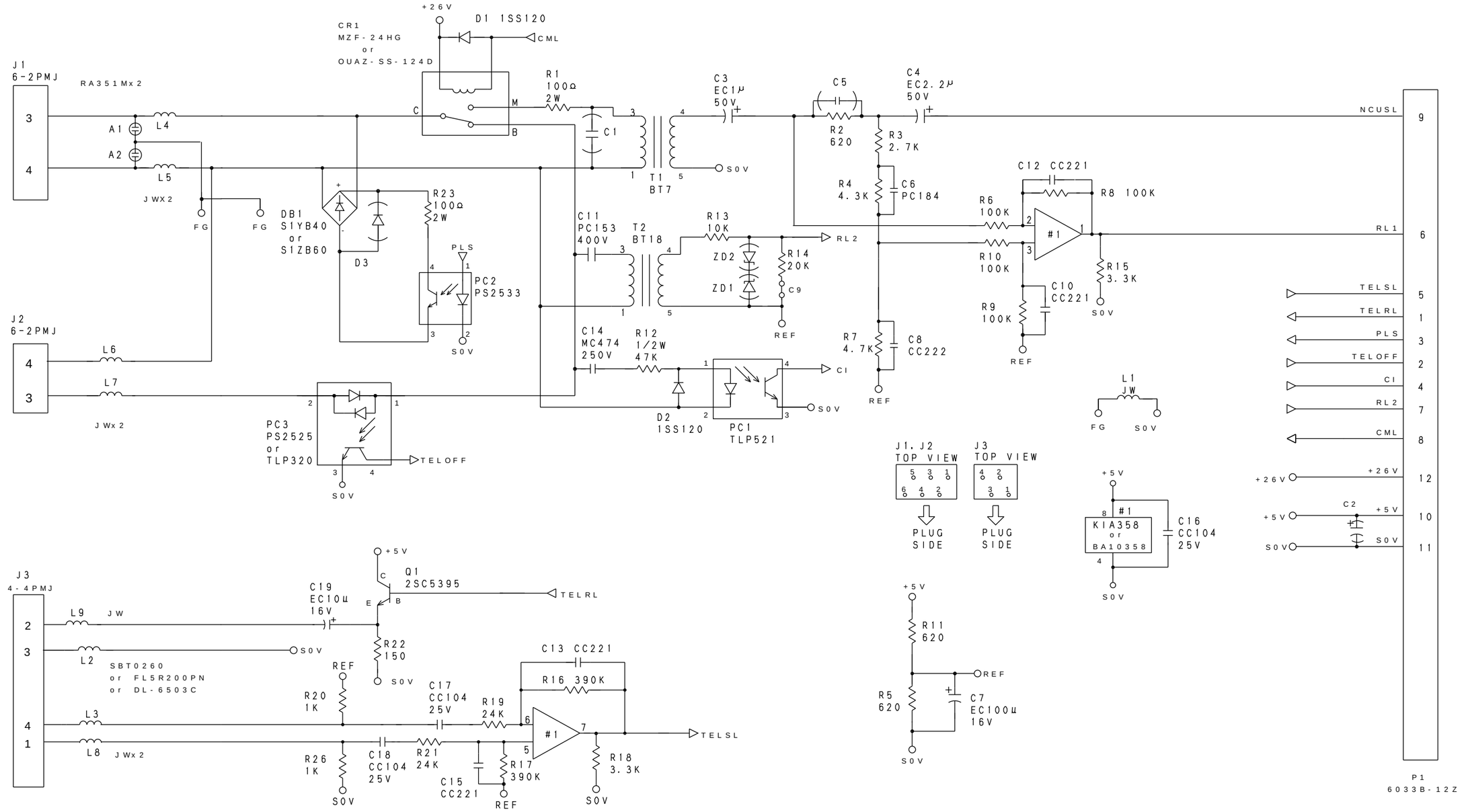

7. MC：メタライズフィルムコンデンサ（METALLIZED POLYESTER FILM CAPACITOR）
6. PC：ポリエステルフィルムコンデンサ（POLYESTER FILM CAPACITOR）
5. CC：セラミックコンデンサ（CERAMIC CAPACITOR）
4. EC：電解コンデンサ（ALUMINUM ELECTROLYTIC CAPACITOR）
3. COMPONENTS IN PARENTHESIS NOT TO BE MOUNTED.
3. （ ）内ノ部品ハ未実装トスル。
2. UNLESS OTHERWISE SPECIFIED, THE VOLTAGE RESISTANCE OF CAPACITORS IS 25V OR 50V.
2. 指示ナキコンデンサモノ耐圧ハ25V又ハ50Vトスル。
1. UNLESS OTHERWISE SPECIFIED, POWER CONSUMPTION OF RESISTORS IS 1/4W.
1. 指示ナキ抵抗ノ消費電力ハ1/4Wトスル。

B	**NCU** **(FAX750/FAX770/FAX-920)** **(U.S.A., CANADA, GULF, NEW ZEALAND, ISRAEL)**

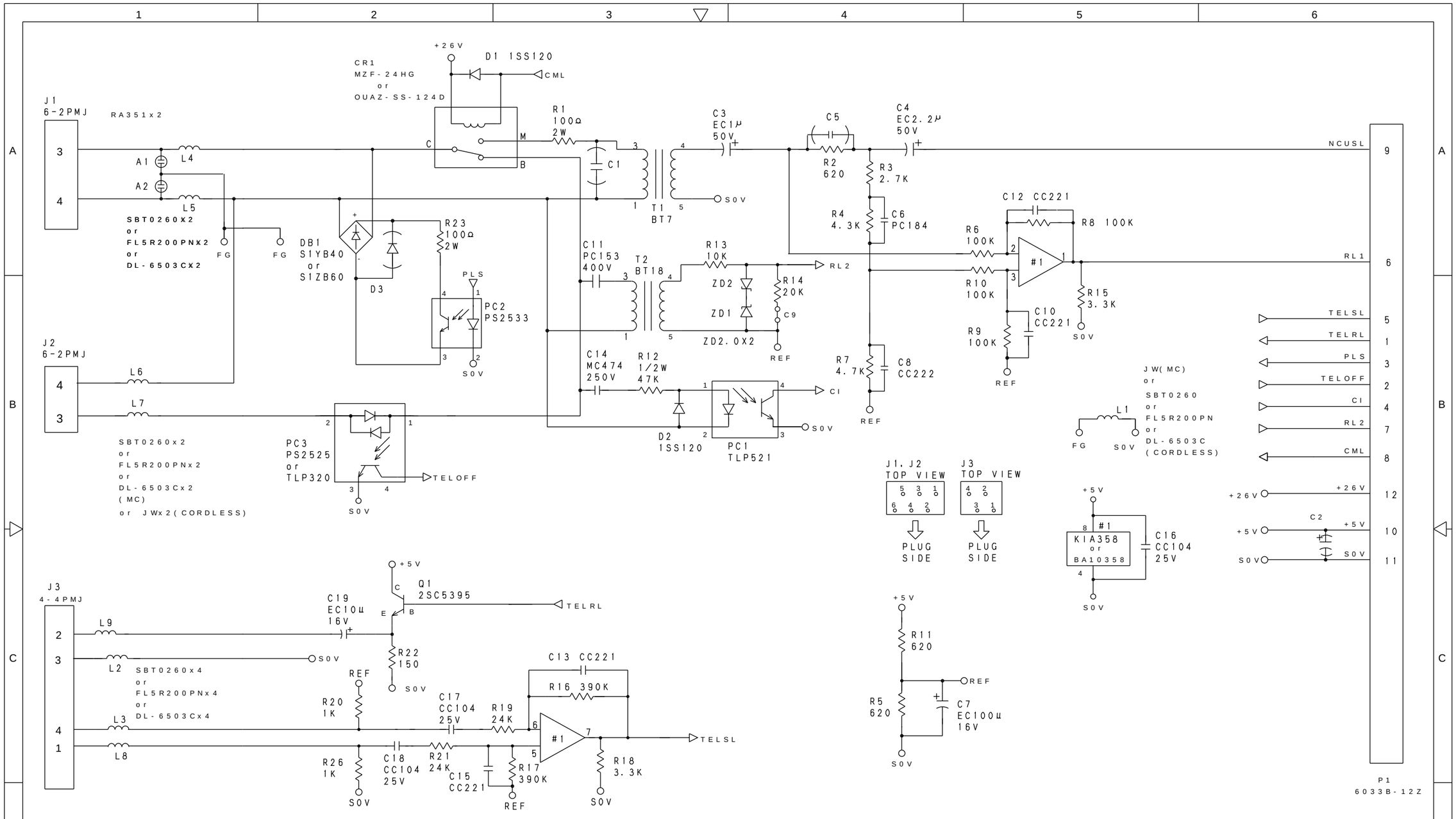

7. MC：メタライズフィルムコンデンサ（METALLIZED POLYESTER FILM CAPACITOR）
6. PC：ポリエステルフィルムコンデンサ（POLYESTER FILM CAPACITOR）
5. CC：セラミックコンデンサ（CERAMIC CAPACITOR）
4. EC：電解コンデンサ（ALUMINUM ELECTROLYTIC CAPACITOR）
3. COMPONENTS IN PARENTHESIS NOT TO BE MOUNTED.
3. （ ）内ノ部品ハ未実装トスル。
2. UNLESS OTHERWISE SPECIFIED, THE VOLTAGE RESISTANCE OF CAPACITORS IS 25V OR 50V.
2. 指示ナキコンデンサモノ耐圧ハ25V又ハ50Vトスル。
1. UNLESS OTHERWISE SPECIFIED, POWER CONSUMPTION OF RESISTORS IS 1/4W.
1. 指示ナキ抵抗ノ消費電力ハ1／4Wトスル。

B	**NCU (FAX870MC/MFC970MC/FAX-930/ FAX-931)** (U.S.A., CANADA, GULF, NEW ZEALAND, ISRAEL)

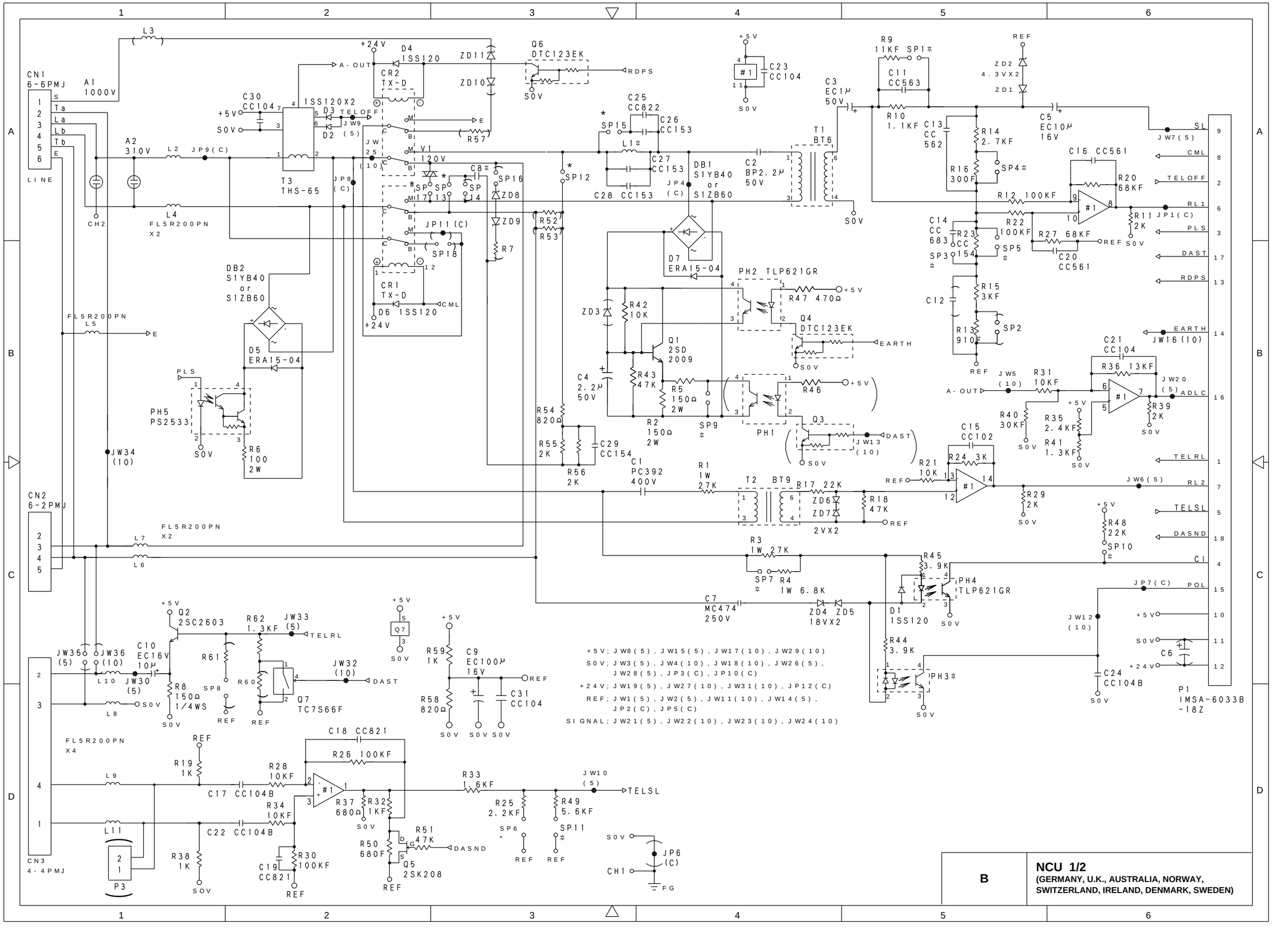
CN1 6-6PMJ
LINE
A1 1000V
CH2
L3
A2 310V
L4 FL5R200PN X2
L2
JP9(C)
T3 THS-65
JP8 (C)
+24V
D4 1SS120
A-OUT
CR2 TX-D
ZD11
ZD10
Q6 DTC123EK
RDPS
S0V
C30 CC104
+5V
S0V
1SS120X2
D3 TELOFF
JW9 (5)
D2
E
R57
JW 25 (10)
V1 120V
C8*
SP15
SP16
ZD8
ZD9
R7
SP12
SP17
SP13
SP14
JP11(C)
SP18
CR1 TX-D
D6 1SS120
CML
+24V
R52
R53
C25 CC822
C26 CC153
L1*
C27 CC153
C28 CC153
DB1 S1YB40 or S1ZB60
JP4 (C)
C2 BP2.2μ 50V
T1 BT6
C3 EC1μ 50V
C23 CC104
R9 11KF SP1*
C11 CC563
R10 1.1KF
REF
ZD2 4.3VX2
ZD1
C5 EC10μ 16V
C13 CC 562
R14 2.7KF
R16 300F
SP4*
C16 CC561
R20 68KF
R12 100KF
R11 2K
JP1(C)
SL
JW7(5)
CML
TELOFF
RL1
PLS
DAST
RDPS
C14 CC 683
R23 CC 154
SP3*
R22 100KF
SP5*
R27 68KF
C20 CC561
C12
R15 3KF
R13 910F
SP2
EARTH
JW16(10)
C21 CC104
R36 13KF
JW5 (10)
R31 10KF
A-OUT
JW20 (5)
ADLC
R39 2K
R40 30KF
R35 2.4KF
R41 1.3KF
C15 CC102
R24 3K
R21 10K
R29 2K
JW6(5)
RL2
TELRL
DASND
CI
POL
R48 22K
SP10*
JP7(C)
JW12 (10)
C24 CC104B
C6
P1 IMSA-6033B -18Z
D7 ERA15-04
PH2 TLP621GR
R47 470Ω
Q4 DTC123EK
EARTH
ZD3
R42 10K
Q1 2SD 2009
R43 47K
C4 2.2μ 50V
R5 150Ω 2W
R2 150Ω 2W
SP9*
PH1
R46
Q3
JW13 (10)
DAST
R54 820Ω
R55 2K
C29 CC154
R56 2K
C1 PC392 400V
R1 1W 27K
T2 BT9
R17 22K
ZD6
ZD7
2VX2
R18 47K
REF
R3 1W 27K
SP7* R4 1W 6.8K
C7 MC474 250V
ZD4 ZD5 18VX2
R45 3.9K
PH4 TLP621GR
D1 1SS120
R44 3.9K
PH3*
DB2 S1YB40 or S1ZB60
D5 ERA15-04
FL5R200PN L5
E
PLS
PH5 PS2533
R6 100 2W
JW34 (10)
CN2 6-2PMJ
FL5R200PN X2
L7
L6
L8
JW35 (5)
JW36 (10)
L10
JW30 (5)
C10 EC16V 10μ
R8 150Ω 1/4WS
SP8
Q2 2SC2603
R62 1.3KF
JW33 (5)
TELRL
R61
R60
JW32 (10)
DAST
Q7 TC7S66F
Q7
R59 1K
C9 EC100μ 16V
R58 820Ω
C31 CC104
+5V; JW8(5), JW15(5), JW17(10), JW29(10)
S0V; JW3(5), JW4(10), JW18(10), JW26(5), JW28(5), JP3(C), JP10(C)
+24V; JW19(5), JW27(10), JW31(10), JP12(C)
REF; JW1(5), JW2(5), JW11(10), JW14(5), JP2(C), JP5(C)
SIGNAL; JW21(5), JW22(10), JW23(10), JW24(10)
CN3 4-4PMJ
FL5R200PN X4
L9
L11
P3
C18 CC821
R26 100KF
R19 1K
R28 10KF
C17 CC104B
R34 10KF
C22 CC104B
R38 1K
C19 CC821
R30 100KF
R37 680Ω
R32 1KF
R33 1.6KF
JW10 (5)
TELSL
R25 2.2KF
R49 5.6KF
SP6*
SP11*
R50 680F
R51 47K
DASND
Q5 2SK208
JP6 (C)
CH1
FG
B
NCU 1/2
(GERMANY, U.K., AUSTRALIA, NORWAY, SWITZERLAND, IRELAND, DENMARK, SWEDEN)

ITEM	UG6711-0XX NCU363ASSY1AT5 #		UG6712-0XX NCU363ASSY1BT5 #		UG6713-0XX NCU363ASSY1CT5 #			
	03 GER	10 SWI	04 UK	26 SWE	06 ARL	07 NOR	11 IRE	13 DEN
PH3	-	-	TLP620GR	TLP620GR	-	-	-	-
L1	RCH855-332K	RCH855-332K	5mm JUMPER	5mm JUMPER	5mm JUMPER	5mm JUMPER	5mm JUMPER	5mm JUMPER
C8	-	-	PC250B105	PC250B105	-	-	-	-
SP1	-	-	-	-	-	-	-	ASSY
SP3	ASSY	-	-	ASSY	ASSY	ASSY	-	-
SP4	ASSY	-	-	-	ASSY	-	-	ASSY
SP5	-	ASSY	-	-	-	-	-	-
SP6	-	ASSY	-	ASSY	ASSY	-	ASSY	ASSY
SP7	ASSY	-	ASSY	-	-	-	-	-
SP9	-	-	-	-	ASSY	ASSY	-	-
SP10	-	-	-	ASSY	-	ASSY	ASSY	-
SP11	ASSY	ASSY	ASSY	-	ASSY	ASSY	-	-
SP12	-	-	ASSY	-	-	-	-	-
SP13	-	-	ASSY	-	-	-	-	-
SP15	-	ASSY	-	-	-	-	-	-
SP17	ASSY	ASSY	-	ASSY	ASSY	ASSY	ASSY	-

'-' SHOWS UN-MOUNTING

B

NCU 2/2
(GERMANY, U.K., AUSTRALIA, NORWAY, SWITZERLAND, IRELAND, DENMARK, SWEDEN)

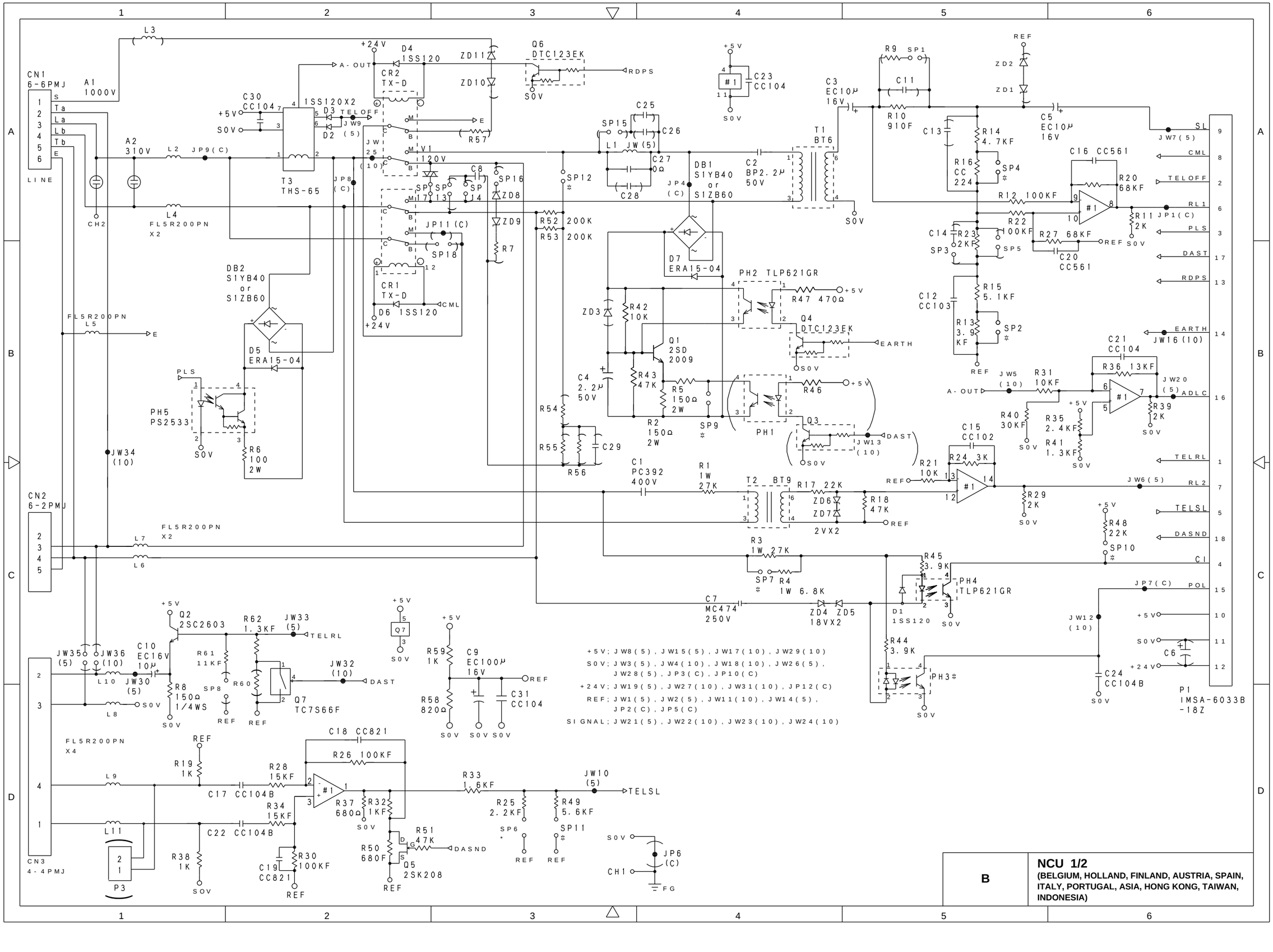

NCU 1/2

(BELGIUM, HOLLAND, FINLAND, AUSTRIA, SPAIN, ITALY, PORTUGAL, ASIA, HONG KONG, TAIWAN, INDONESIA)

B

ITEM	UG6715-0XX NCU363ASSY2AT5 #							UG6716-009 NCU363ASSY2BT5 #
	08 BEL	12 FIN	14 AUS	15 SPA	16 ITA	23 TWN	40 ASA	09 HOL
PH3	-	-	-	-	-	-	-	TLP620GR
SP2	ASSY	ASSY	ASSY	-	-	-	ASSY	ASSY
SP4	ASSY	ASSY	ASSY	-	-	-	ASSY	ASSY
SP6	ASSY	ASSY	-	-	-	-	ASSY	ASSY
SP7	-	-	-	ASSY	-	-	-	-
SP9	ASSY	-	-	ASSY	-	ASSY	ASSY	ASSY
SP10	-	-	-	ASSY	-	-	-	-
SP11	-	-	ASSY	ASSY	ASSY	ASSY	ASSY	ASSY
SP12	-	-	-	-	-	-	-	ASSY

' - ' SHOWS UN- MOUNTI NG

B	**NCU 2/2** **(BELGIUM, HOLLAND, FINLAND, AUSTRIA, SPAIN, ITALY, PORTUGAL, ASIA, HONG KONG, TAIWAN, INDONESIA)**

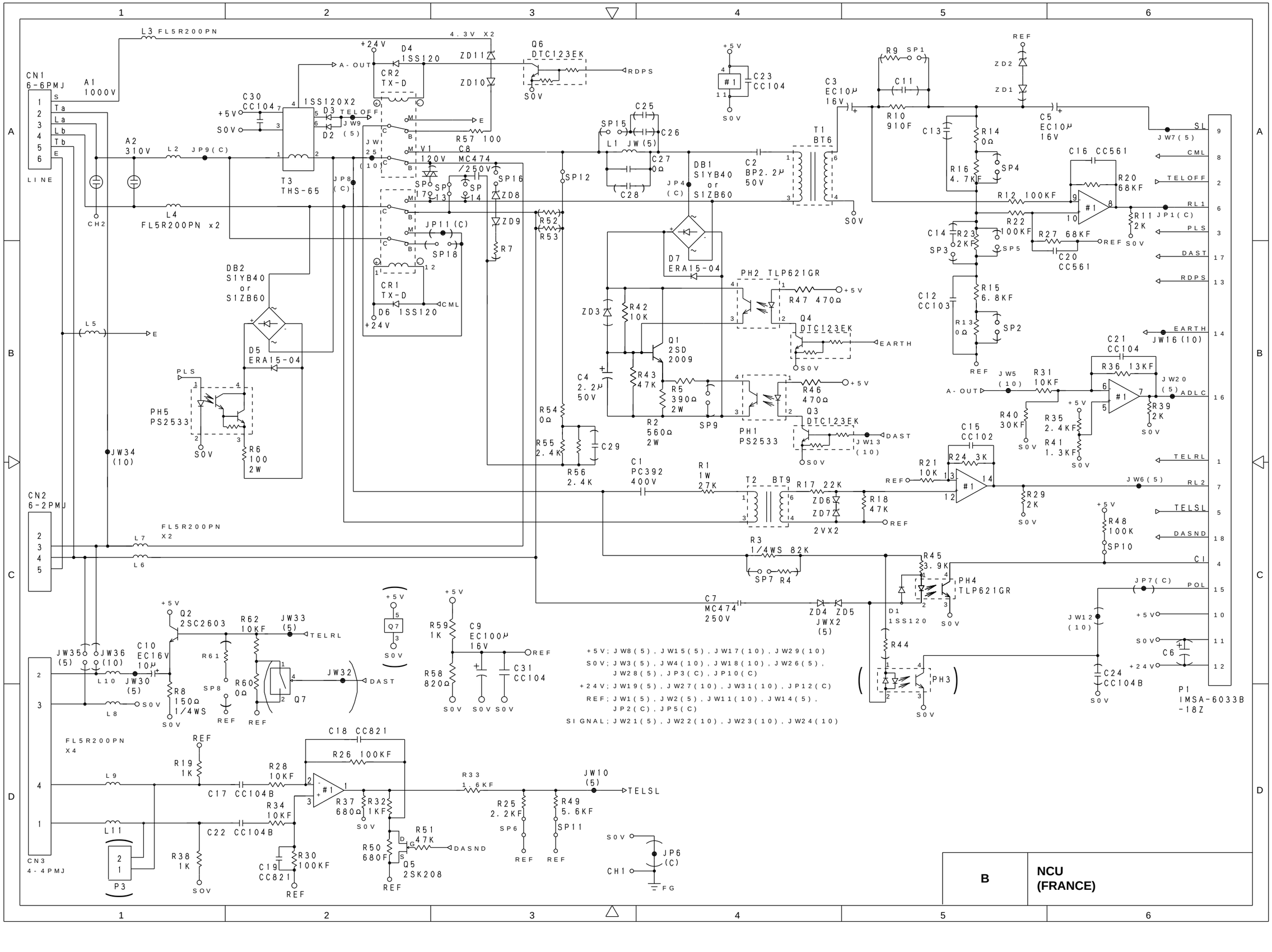
CN1 6-6PMJ
LINE
A1 1000V
A2 310V
CH2
L3 FL5R200PN
L4 FL5R200PN x2
L2
JP9(C)
T3 THS-65
JP8 (C)
4.3V X2
+24V
D4 1SS120
CR2 TX-D
A-OUT
ZD11
ZD10
Q6 DTC123EK
RDPS
S0V
C30 CC104
+5V
S0V
1SS120X2
D3 TELOFF
JW9
D2 (5)
E
R57 100
JW 25 (10)
V1 120V
C8 MC474 /250V
SP15
SP17
SP13
SP14
SP16
ZD8
ZD9
R7
JP11(C)
SP18
CR1 TX-D
D6 1SS120
CML
+24V
SP12
R52
R53
C25
SP15
C26
L1 JW(5)
C27 0Ω
C28
DB1 S1YB40 or S1ZB60
JP4 (C)
C2 BP2.2μ 50V
T1 BT6
S0V
C23 CC104
+5V
#1
S0V
C3 EC10μ 16V
R9 SP1
C11
R10 910F
C5 EC10μ 16V
REF
ZD2
ZD1
C13
R14 0Ω
R16 4.7KF
SP4
C16 CC561
R20 68KF
R12 100KF
R22 100KF
R27 68KF
REF
S0V
C20 CC561
C14
R23 2KF
SP3
SP5
R11 2K
JP1(C)
SL
JW7(5)
CML
TELOFF
RL1
PLS
DAST
RDPS
D7 ERA15-04
PH2 TLP621GR
R47 470Ω
Q4 DTC123EK
EARTH
ZD3
R42 10K
Q1 2SD 2009
R43 47K
R5 390Ω 2W
R2 560Ω 2W
SP9
C4 2.2μ 50V
R54 0Ω
R55 2.4K
R56 2.4K
C29
PH1 PS2533
R46 470Ω
Q3 DTC123EK
JW13 (10)
DAST
C12 CC103
R15 6.8KF
R13 0Ω
SP2
REF
EARTH
JW16(10)
C21 CC104
R36 13KF
JW5 (10)
R31 10KF
A-OUT
JW20 (5)
ADLC
R39 2K
R40 30KF
R35 2.4KF
R41 1.3KF
C15 CC102
R24 3K
R21 10K
REF
TELRL
JW6(5)
RL2
R29 2K
DB2 S1YB40 or S1ZB60
D5 ERA15-04
L5
E
PLS
PH5 PS2533
R6 100 2W
JW34 (10)
C1 PC392 400V
R1 1W 27K
T2 BT9
R17 22K
ZD6
ZD7
2VX2
R18 47K
REF
R3 1/4WS 82K
SP7 R4
C7 MC474 250V
ZD4 ZD5 JWX2 (5)
R45 3.9K
PH4 TLP621GR
D1 1SS120
S0V
R48 100K
SP10
TELSL
DASND
CI
JP7(C)
POL
JW12 (10)
+5V
S0V
C6
+24V
C24 CC104B
P1 IMSA-6033B -18Z
R44
PH3
CN2 6-2PMJ
FL5R200PN X2
L7
L6
+5V
Q2 2SC2603
R62 10KF
JW33 (5)
TELRL
JW35 (5)
JW36 (10)
C10 EC16V 10μ
L10
JW30 (5)
R8 150Ω 1/4WS
L8
R61
SP8
R60 0Ω
REF
Q7
JW32
DAST
+5V
Q7
S0V
+5V
R59 1K
C9 EC100μ 16V
R58 820Ω
REF
C31 CC104
S0V S0V S0V
+5V; JW8(5), JW15(5), JW17(10), JW29(10)
S0V; JW3(5), JW4(10), JW18(10), JW26(5), JW28(5), JP3(C), JP10(C)
+24V; JW19(5), JW27(10), JW31(10), JP12(C)
REF; JW1(5), JW2(5), JW11(10), JW14(5), JP2(C), JP5(C)
SIGNAL; JW21(5), JW22(10), JW23(10), JW24(10)
FL5R200PN X4
L9
L11
C18 CC821
R26 100KF
R19 1K
R28 10KF
C17 CC104B
R34 10KF
C22 CC104B
R38 1K
C19 CC821
R30 100KF
R37 680Ω
R32 1KF
R33 1.6KF
R25 2.2KF
SP6
R49 5.6KF
SP11
JW10 (5)
TELSL
R51 47K
R50 680F
Q5 2SK208
DASND
JP6 (C)
CH1
FG
CN3 4-4PMJ
P3
B
NCU (FRANCE)

+5V：JW8(5)、JW15(5)、JW17(10)、JW29(10)
S0V：JW3(5)、JW4(10)、JW18(10)、JW26(5)、JW28(5)、JP3(C)、JP10(C)
+24V：JW19(5)、JW27(10)、JW31(10)、JP12(C)
REF：JW1(5)、JW2(5)、JW11(10)、JW14(5)、JP2(C)、JP5(C)
SIGNAL：JW21(5)、JW22(10)、JW23(10)、JW24(10)

B	NCU (CHINA, INDIA)

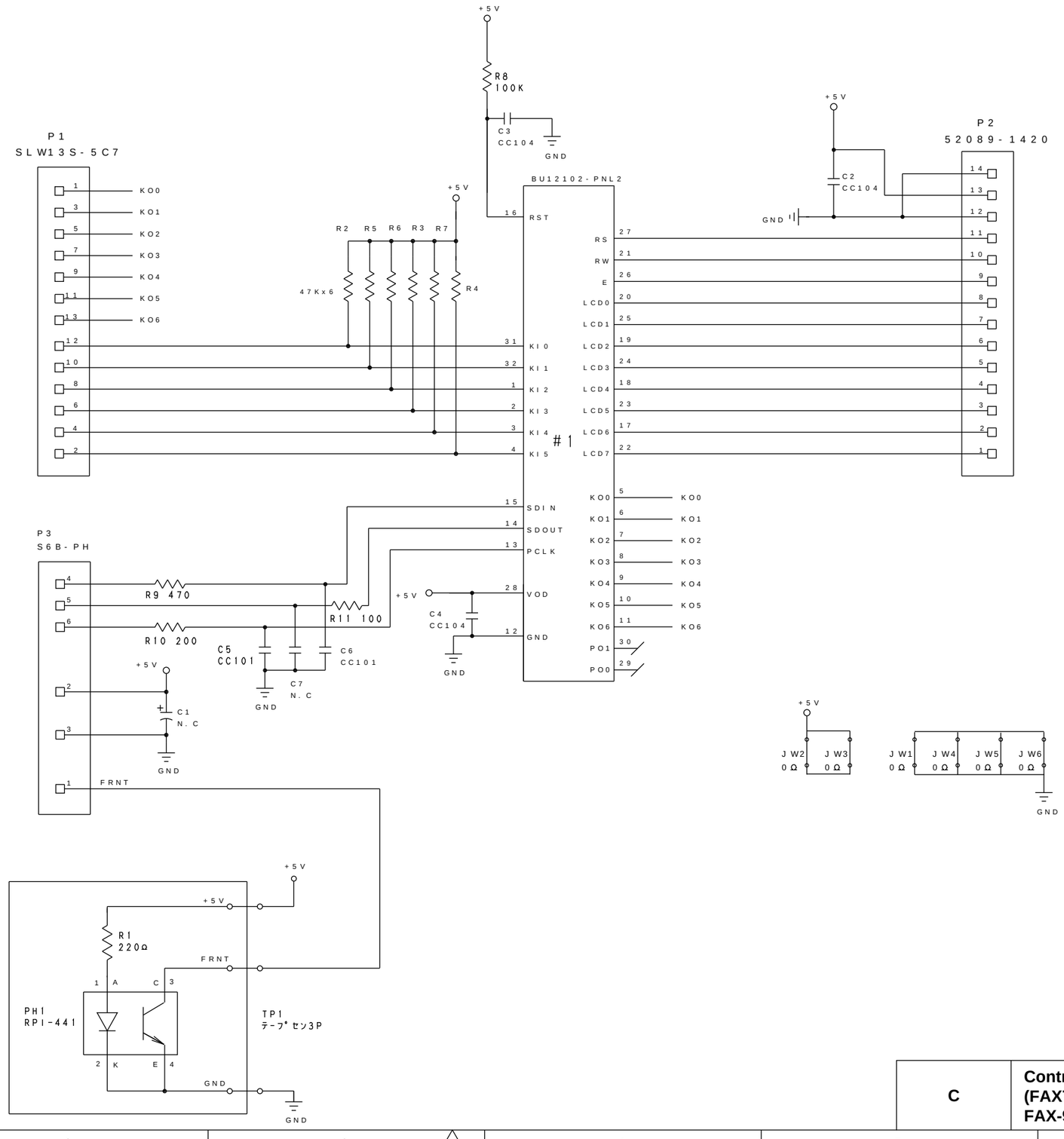

C	**Control Panel 1/2 (FAX750/FAX770/FAX-910/FAX-920/ FAX-921/MFC-925)**

T5-US-PANEL(BASE) KEY MATRIX REFERENCE TABLE 1

KEY NO.	KEY NAME	KEY COE
1	←	06
2	→	0E
3	SET	16
4	MODE	15
5	RESOLUTION	1E
6	HOOK	04
7	10KEY-1	0C
8	10KEY-2	14
9	10KEY-3	1C
10	HOLD	03
11	10KEY-4	0B
12	10KEY-5	13
13	10KEY-6	1B
14	REDIAL/PAUSE	02
15	10KEY-7	0D
16	10KEY-8	0A
17	10KEY-9	12
18	SPPED DIAL	05
19	10KEY-*	01
20	10KEY-0	09
21	10KEY-#	11
22	FUNCTION	36
23	TEL-INDEX	35
24	HELP/Q.SCAN	2E
25	SORT	1D
26	ITOUCH-1	24
27	ITOUCH-2	25
28	ITOUCH-3	2C
29	ITOUCH-4	2D
30	ENLARGE/REDUCE	1A
31	ITOUCH-5	22
32	ITOUCH-6	23
33	ITOUCH-7	2A
34	ITOUCH-8	2B
35	COPY	19
36	STOP	21
37	START	29

T5-US-PANEL(MC/BASE) KEY MATRIX REFERENCE TABLE 2

	KO0 P1-1P	KO1 P1-3P	KO2 P1-5P	KO3 P1-7P	KO4 P1-9P	KO5 P1-11P	KO6 P1-13P
KI0 P1-12P	19	20	21	35	36	37	SW4
KI1 P1-10P	14	16	17	30	31	33	SW1
KI2 P1-8P	10	11	12	13	32	34	SW2
KI3 P1-6P	6	7	8	9	26	28	SW3
KI4 P1-4P	18	15	4	25	27	29	23
KI5 P1-2P	1	2	3	5		24	22

C	**Control Panel 2/2 (FAX750/FAX770/FAX-910/FAX-920/ FAX-921/MFC-925)**

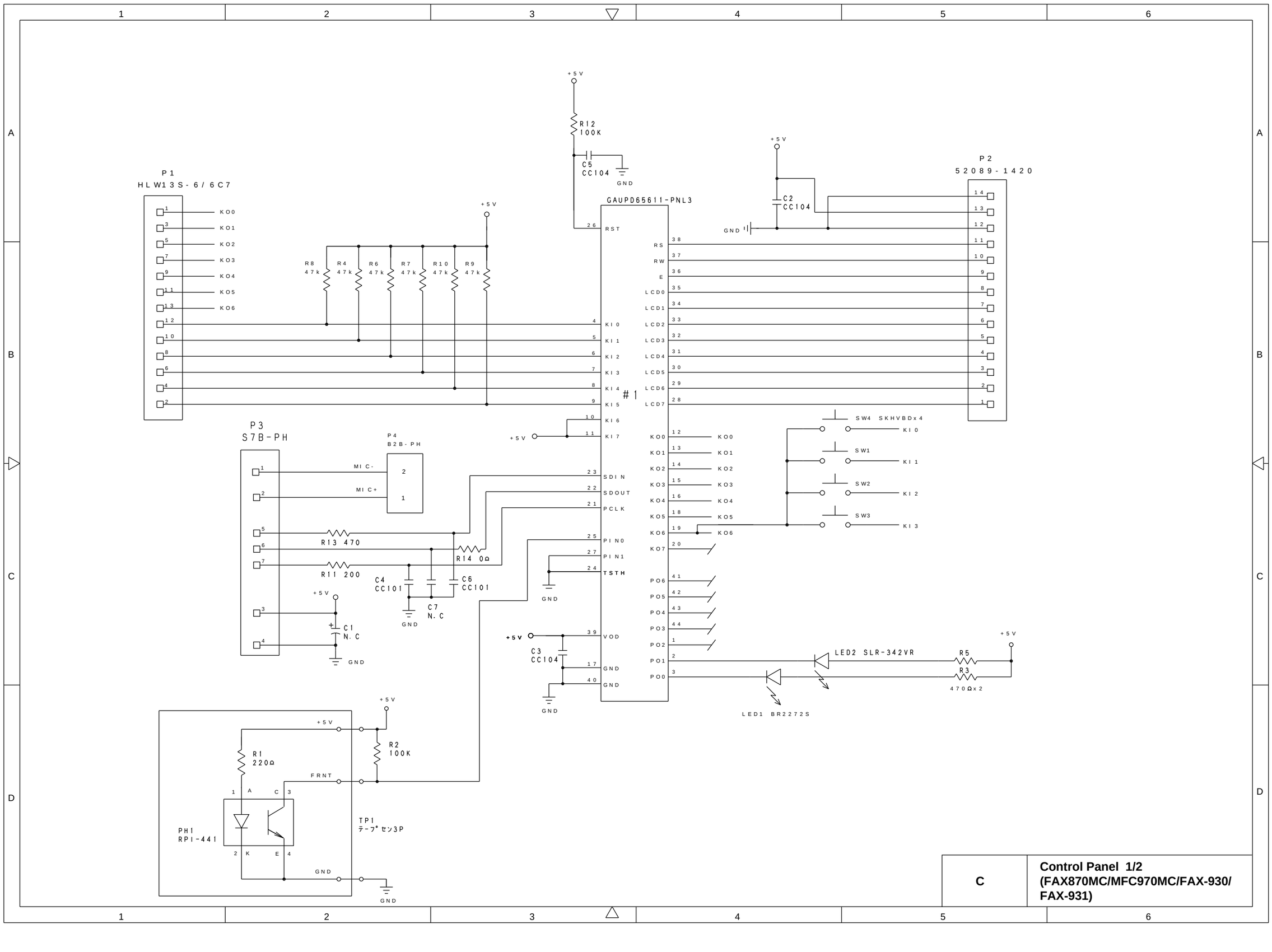

C	**Control Panel 1/2 (FAX870MC/MFC970MC/FAX-930/ FAX-931)**

T5-US-PANEL(MC/BASE) KEY MATRIX REFERENCE TABLE 1

KEY NO.	KEY NAME	KEY COE
1	←	06
2	→	0E
3	SET	16
4	MODE	15
5	RESOLUTION	1E
6	HOLD	04
7	10KEY-1	0C
8	10KEY-2	14
9	10KEY-3	1C
10	REDIAL/PAUSE	03
11	10KEY-4	0B
12	10KEY-5	13
13	10KEY-6	1B
14	SPEED DIAL	02
15	10KEY-7	0D
16	10KEY-8	0A
17	10KEY-9	12
18	SPEAKER PHONE	05
19	10KEY-*	01
20	10KEY-0	09
21	10KEY-#	11
22	FUNCTION	36
23	TEL-INDEX	35
24	HELP/Q.SCAN	2E
25	SORT	1D
26	1TOUCH-1	24
27	1TOUCH-2	25
28	1TOUCH-3	2C
29	1TOUCH-4	2D
30	ENLARGE/REDUCE	1A
31	1TOUCH-5	22
32	1TOUCH-6	23
33	1TOUCH-7	2A
34	1TOUCH-8	2B
35	COPY	19
36	STOP	21

KEY NO.	KEY NAME	KEY COE
37	START	29
SW1	AUTO RECIEVE	32
SW2	PLAY	33
SW3	ERASE	34
SW4	RECORD	31

T5-US-PANEL(MC/BASE) KEY MATRIX REFERENCE TABLE 2

	KO0 P1-1P	KO1 P1-3P	KO2 P1-5P	KO3 P1-7P	KO4 P1-9P	KO5 P1-11P	KO6 P1-13P
KI0 P1-12P	19	20	21	35	36	37	SW4
KI1 P1-10P	14	16	17	30	31	33	SW1
KI2 P1-8P	10	11	12	13	32	34	SW2
KI3 P1-6P	6	7	8	9	26	28	SW3
KI4 P1-4P	18	15	4	25	27	29	23
KI5 P1-2P	1	2	3	5		24	22

C	**Control Panel 2/2 (FAX870MC/MFC970MC/FAX-930/ FAX-931)**

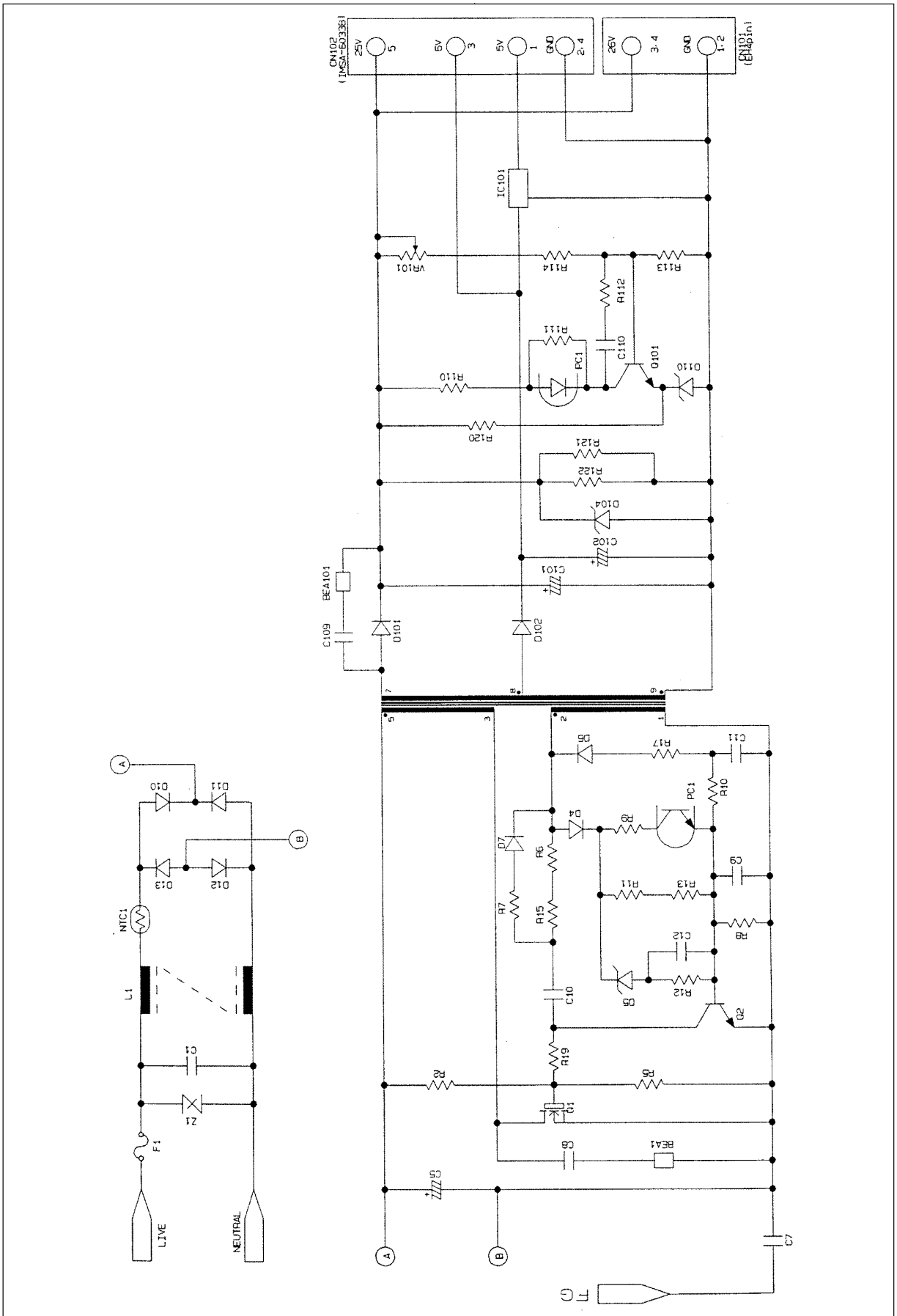

D	**Power supply 100-120V**

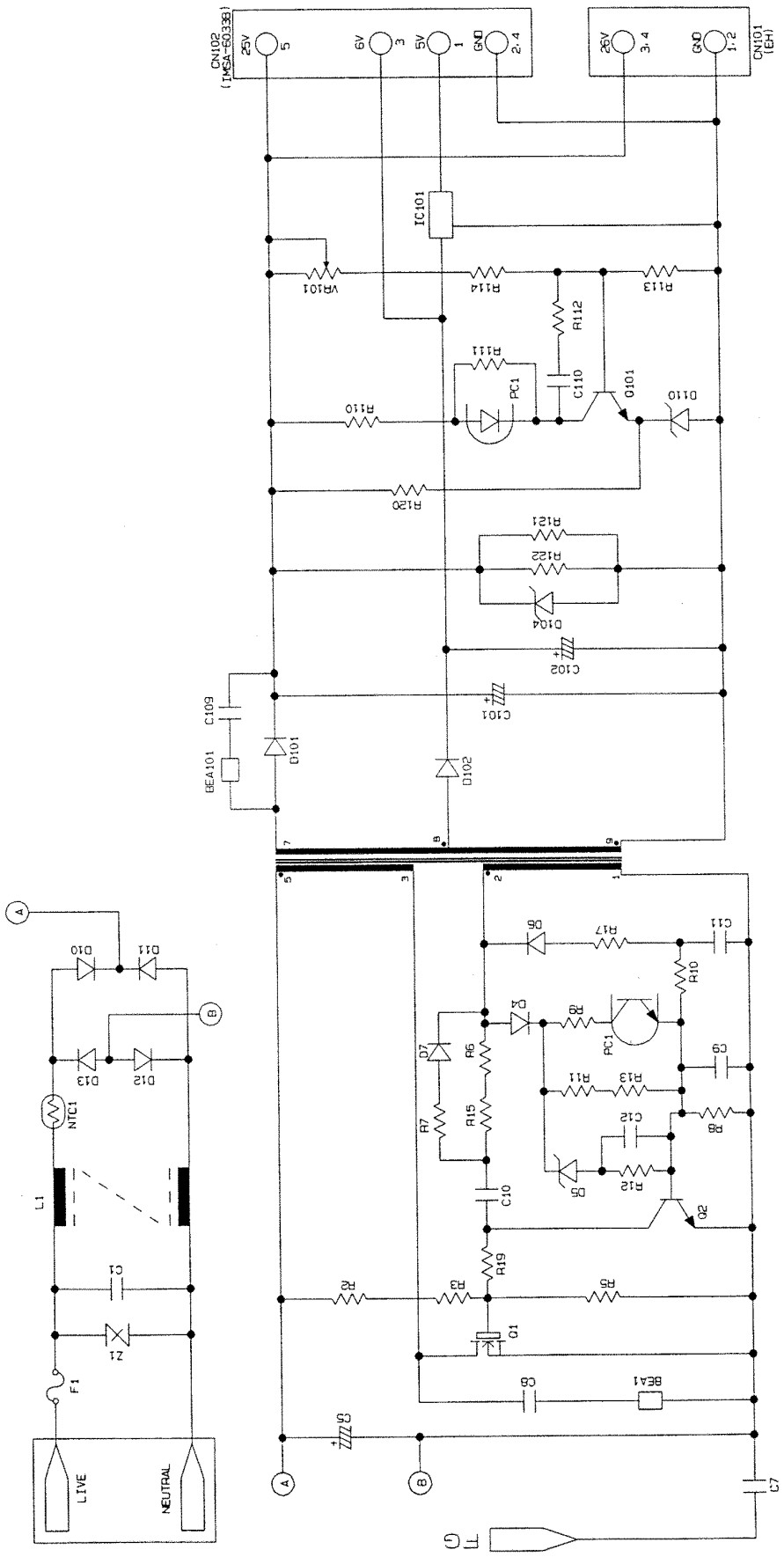

D	**Power supply 200-240V**

brother

FACSIMILE EQUIPMENT

PARTS REFERENCE LIST

MODEL: FAX-910 / 920 / 921 / 930 / 931
MFC-925

(For Germany / United Kingdom / France / Australia / Norway / Belgium / Netherlands / Switzerland / Ireland / Finland / Denmark / Austria / Spain / Italy / Israel / Sweden / New Zealand / Czechoslovakia / Euro Generic)

MFC-970MC

(For Australia / New Zealand)

© Copyright Brother 1998
All rights reserved
No part of this publication may be reproduced in any form or by any means without permission in writing from the publisher.
Specifications are subject to change without prior notice.

NOTES FOR USING THIS PARTS REFERENCE LIST

1. In the case of ordering parts, it needs mentioning the following items:
   (1) Code
   (2) Q' ty
   (3) Description

   Note: No orders without Parts Code or Tool No. can be accepted.

[Example]

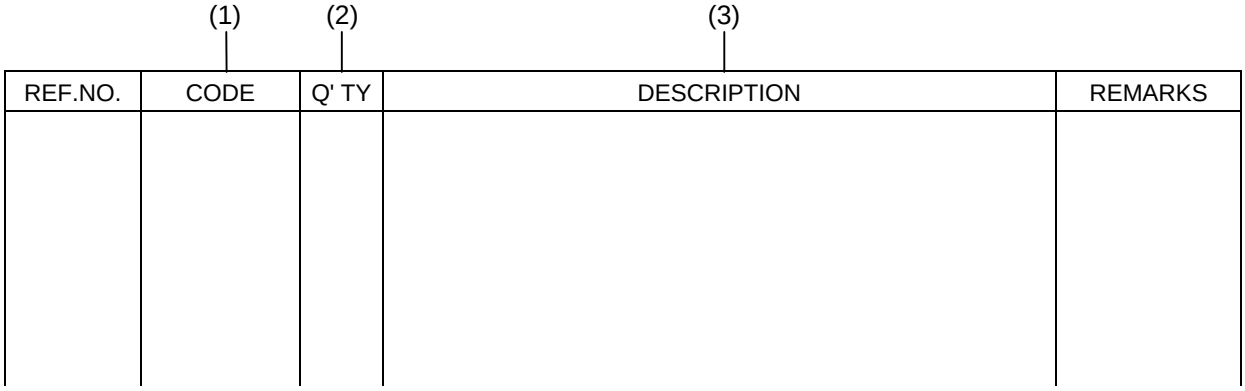

2. Parts change will be informed by the technical information.

COUNTRIES

GERMANY ----- GER
UNITED KINGDOM ----- UK
FRANCE ----- FRA
ARL ----- AUSTRALIA
NORWAY ----- NOR
BELGIUM ----- BEL
NETHERLANDS ----- NLD
SWITZERLAND ----- CHE
IRELAND ----- IRE
FINLAND ----- FIN
DENMARK ----- DEN
AUSTRIA ----- AUS
SPAIN ----- SPA
ITALY ----- ITA
ISRAEL ----- ISR
SWEDEN ----- SWE
NEW ZEALAND ----- NZ
EURO GENERIC ----- GNR

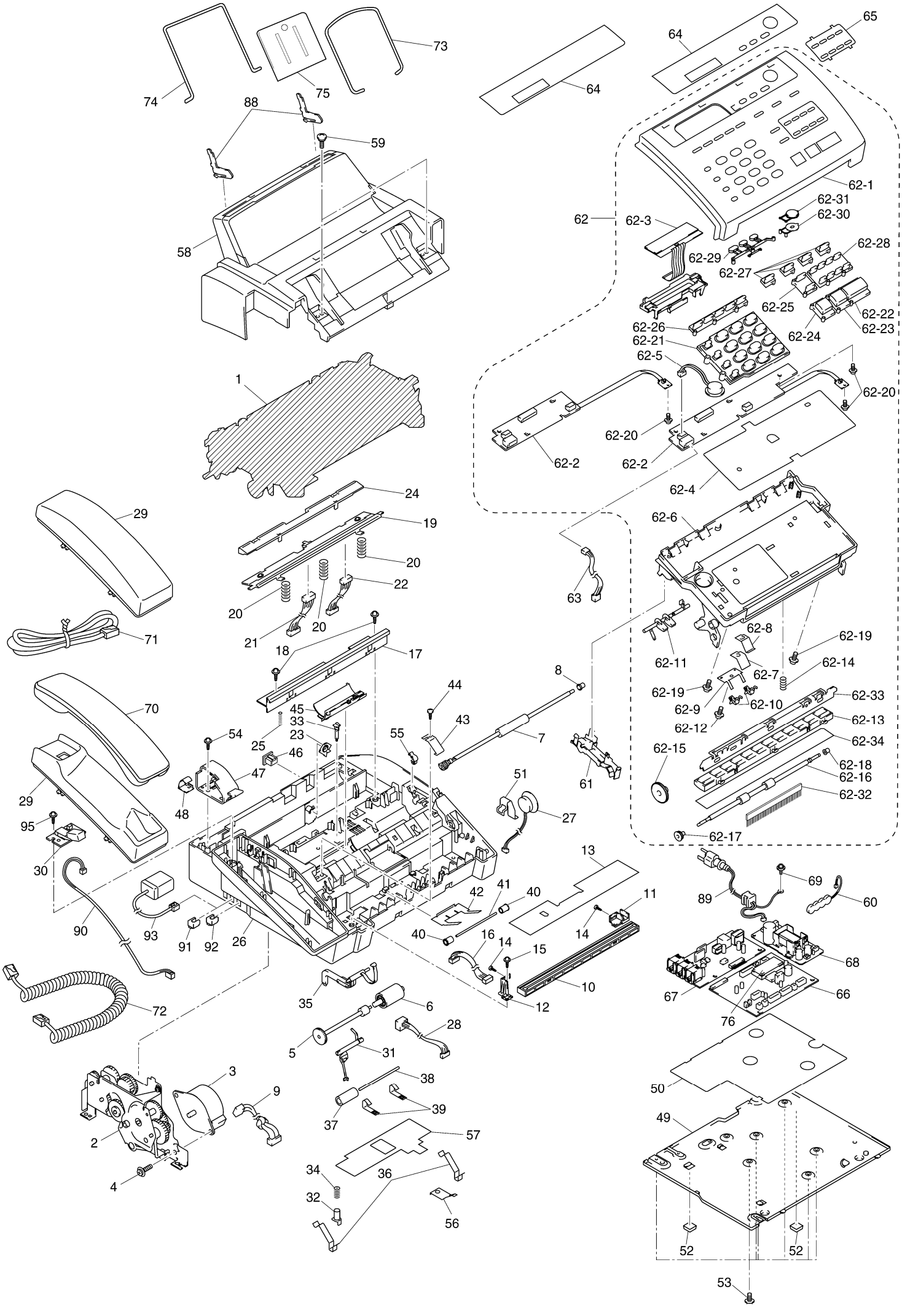
73
74
75
88
59
58
64
64
65
62-1
62
62-31
62-30
62-3
62-29
62-28
62-27
62-25
62-22
62-23
62-26
62-24
62-21
62-5
62-20
62-20
62-2
62-2
62-4
1
24
19
20
22
20
21
20
18
17
29
71
70
29
95
30
90
93
91
92
26
72
54
25
23
33
45
46
47
48
44
43
55
8
7
61
63
62-6
62-11
62-8
62-19
62-7
62-14
62-19
62-9
62-10
62-33
62-12
62-13
62-34
62-15
62-18
62-16
62-32
62-17
51
27
13
11
14
42
41
40
40
16
14
15
12
10
35
6
28
5
31
38
39
37
57
34
36
32
56
3
9
2
4
89
69
60
68
67
66
76
50
49
52
52
53

REF.NO.	CODE	Q'TY	DESCRIPTION	REMARKS
1			**PLATEN FRAME ATTACHMENT**	
2	UF9650001	1	DRIVE UNIT	
3	Z25947001	1	MOTOR	
4	U09759001	1	SCREW, PAN (WASHER) M3X6 DB	
5	UF9693001	1	SEPARATION ROLLER GEAR	
6	UF6613001	1	SEPARATION ROLLER	
7	UU0244001	1	LF ROLLER ASSY	
8	UF9949001	1	BEARING, EJECTION ROLLER	
9	UG6602001	1	MOTOR HARNESS	
10	UG6683001	1	CIS UNIT	
11	UF9814001	1	CIS HOLDER, R	
12	UF9815001	1	CIS HOLDER, L	
13	UF9816001	1	CIS FILM	
14	085310815	2	TAPTITE, BIND B M3X8	
15	UU0231001	1	TAPTITE, PAN B M3X8	
16	UG5013001	1	CIS-MAIN HARNESS	
17	UF9851001	1	RECORDER FRAME	
18	087310815	2	TAPTITE, CUP B M3X8	
19	UF9852001	1	RECORDING HEAD ASSY	
20	UF8072001	3	HEAD SPRING, COMPRESSION	
21	UG6606001	1	MAIN-HEAD HARNESS FOR FAX-910/FAX-920/FAX-921/MFC-925	
21	UG6707001	1	MAIN-HEAD HARNESS FOR FAX-930/FAX-931/MFC-970MC	
22	UG6607001	1	HEAD-POWER HARNESS	
23	UF9855001	1	HEAD ADJUSTER	
24	UF9856001	1	HEAD PROTECTOR	
25	UF9857001	1	GROUNDING SPRING	
26	UF9800001	1	MAIN FRAME, GRAY(1395), FAX-910/920/930 FOR GER/UK/FRA/NOR/CHE/IRE/FIN/DEN/AUS/ISR/SWE/CZE/GNR	
26	UF9800002	1	MAIN FRAME, WHITE(1397), FAX-920/FAX-930 FOR ARL/NZ	
26	UF9800003	1	MAIN FRAME, WHITE(1138), FAX-920 FOR UK, FAX-921/FAX-931/MFC-925/MFC-970MC	
27	UG6670001	1	SPEAKER	
28	UG6698001	1	PC I/F MODULAR HARNESS	
29	UF9801001	1	HANDSET MOUNT, GRAY(1395), FAX-920/930 FOR GER/UK/FRA/NOR/CHE/IRE/FIN/DEN/AUS/ISR/SWE/CZE/GNR	
29	UF9801002	1	HANDSET MOUNT, WHITE(1397), MFC-920/930 FOR ARL/NZ	
29	UF9801003	1	HANDSET MOUNT, WHITE(1138), FAX-921/931/MFC-925/970MC, FAX-920 FOR UK	
29	UF9983001	1	DUMMY MOUNT, GRAY(1395) FOR FAX-910	
30	UG6615001	1	HOOK SWITCH PCB FOR FAX-920/921/930/931/MFC-925/970MC	
31	UF9802001	1	DOCUMENT REAR SENSOR ACTUATOR	
32	UF9803001	1	COVER SENSOR ACTUATOR A	
33	UF9817001	1	COVER SENSOR ACTUATOR B	
34	UF9818001	1	COVER SENSOR ACTUATOR SPRING	
35	UF9804001	1	RIBBON SENSOR ACTUATOR	
36	UF9806001	2	PANEL-LOCK LEAF SPRING	
37	UU0021001	1	PINCH ROLLER	
38	UF6267000	1	ROLLER SHAFT	
39	UF9807001	2	PINCH ROLLER SPRING	
40	UL6244002	2	DOCUMENT PRESSURE ROLLER	
41	UF6267000	1	ROLLER SHAFT	
42	UF9808001	1	DOCUMENT PRESSURE ROLLER SPRING	
43	UU0074001	1	LF LEAF SPRING	
44	085310815	1	TAPTITE, BIND B M3X8	

REF.NO.	CODE	Q'TY	DESCRIPTION	REMARKS
45	UF9809004	1	ROM COVER, GRAY(1267)	
46	UF4759000	1	PC I/F COVER, NATURAL, FAX-921/931, FAX-920(WHITE) FOR UK, FAX-920/930 FOR ARL/NZ	
46	UF4759002	1	PC I/F COVER, BLACK, FAX-910/920/930 FOR GER/UK/FRA/NOR/CHE/IRE/FIN/DEN/AUS/ISR/SWE/CZE/GNR	
47	UF9810001	1	COVER STOPPER	
48	UF9875001	1	COVER STOPPER SPRING PLATE	
49	UF9822001	1	BOTTOM PLATE	
50	UF9846001	1	INSULATION SHEET	
51	UF9847001	1	SPEAKER SUPPORT SPRING	
52	UF6761001	2	RUBBER FOOT	
53	087310815	7	TAPTITE, CUP B M3X8	
54	087310815	1	TAPTITE, CUP B M3X8	
55	UF9812001	1	RIBBON SHAFT STOPPER	
56	UF9819001	1	RIBBON SHAFT STOPPER SPRING	
57	UF9824001	1	HARNESS GUIDE FILM	
58	UF9848001	1	RECORDING PAPER COVER ASSY, GRAY(1395), FAX-910/920/930 FOR GER/UK/FRA/NOR/CHE/IRE/FIN/DEN/AUS/ISR/SWE/CZE/GNR	
58	UF9848002	1	RECORDING PAPER COVER ASSY, WHITE(1397), FAX-920/930 FOR ARL/NZ	
58	UF9848003	1	RECORDING PAPER COVER ASSY, WHITE(1138), FAX-920 FOR UK, FAX-921/931/MFC-925/970MC	
59	UF9823001	2	SHOULDER SCREW	
60	UG3732001	1	BATTERY ASSY FOR FAX-930/931/MFC-970MC	
61	UF9963001	1	HARNESS HOLDER	
62	UF9884001	1	CONTROL PANEL ASSY, GRAY(1395), FAX-910 FOR GER	
62	UU0627001	1	CONTROL PANEL ASSY, GRAY(1395), FAX-910 FOR CHE	
62	UF9914001	1	CONTROL PANEL ASSY, GRAY(1395), FAX-920 FOR GER/AUS	
62	UF9915001	1	CONTROL PANEL ASSY, GRAY(1395), FAX-920 FOR UK/CHE/IRE/ISR/CZE/GNR	
62	LE0296003	1	CONTROL PANEL ASSY, WHITE(1138), FAX-920 FOR UK	
62	UF9916001	1	CONTROL PANEL ASSY, GRAY(1395), FAX-920 FOR FRA	
62	UF9917001	1	CONTROL PANEL ASSY, GRAY(1395), FAX-920 FOR NOR	
62	UF9921001	1	CONTROL PANEL ASSY, GRAY(1395), FAX-920 FOR FIN	
62	UF9922001	1	CONTROL PANEL ASSY, GRAY(1395), FAX-920 FOR DEN	
62	UF9925001	1	CONTROL PANEL ASSY, GRAY(1395), FAX-920 FOR SWE	
62	UU0234002	1	CONTROL PANEL ASSY, WHITE(1397), FAX-920 FOR ARL/NZ	
62	UF9918003	1	CONTROL PANEL ASSY, WHITE(1138), FAX-921 FOR BEL	
62	UF9919003	1	CONTROL PANEL ASSY, WHITE(1138), FAX-921 FOR NLD	
62	UF9923003	1	CONTROL PANEL ASSY, WHITE(1138), FAX-921 FOR SPA	
62	UF9924003	1	CONTROL PANEL ASSY, WHITE(1138), FAX-921 FOR ITA	
62	UU0140003	1	CONTROL PANEL ASSY, WHITE(1138), MFC-925 FOR GER	
62	UU0121003	1	CONTROL PANEL ASSY, WHITE(1138), MFC-925 FOR UK/CHE	
62	UU0122003	1	CONTROL PANEL ASSY, WHITE(1138), MFC-925 FOR FRA	
62	UU0123003	1	CONTROL PANEL ASSY, WHITE(1138), MFC-925 FOR NOR	
62	UU0124003	1	CONTROL PANEL ASSY, WHITE(1138), MFC-925 FOR BEL	
62	UU0125003	1	CONTROL PANEL ASSY, WHITE(1138), MFC-925 FOR NLD	
62	UU0126003	1	CONTROL PANEL ASSY, WHITE(1138), MFC-925 FOR DEN	
62	UU0127003	1	CONTROL PANEL ASSY, WHITE(1138), MFC-925 FOR SWE	
62	UU0159001	1	CONTROL PANEL ASSY, GRAY(1395), FAX-930 FOR GER/AUS	
62	UU0160001	1	CONTROL PANEL ASSY, GRAY(1395), FAX-930 FOR UK/CHE/IRE/CZE/GNR	
62	UU0161001	1	CONTROL PANEL ASSY, GRAY(1395), FAX-930 FOR FRA	
62	UU0162001	1	CONTROL PANEL ASSY, GRAY(1395), FAX-930 FOR NOR	

REF.NO.	CODE	Q'TY	DESCRIPTION	REMARKS
62	LE0388001	1	CONTROL PANEL ASSY, GRAY(1395), FAX-930 FOR FIN	
62	LE0390001	1	CONTROL PANEL ASSY, GRAY(1395), FAX-930 FOR DEN	
62	UU0167001	1	CONTROL PANEL ASSY, GRAY(1395), FAX-930 FOR SWE	
62	UU0250002	1	CONTROL PANEL ASSY, WHITE(1397), FAX-930 FOR ARL/NZ	
62	UU0163003	1	CONTROL PANEL ASSY, WHITE(1138), FAX-931 FOR BEL	
62	UU0164003	1	CONTROL PANEL ASSY, WHITE(1138), FAX-931 FOR NLD	
62	UU0165003	1	CONTROL PANEL ASSY, WHITE(1138), FAX-931 FOR SPA	
62	UU0166003	1	CONTROL PANEL ASSY, WHITE(1138), FAX-931 FOR ITA	
62	UU0313003	1	CONTROL PANEL ASSY, WHITE(1138), MFC-970MC FOR ARL/NZ	
62-1	UU0446003	1	CONTROL PANEL, GRAY(1395), FAX910	
62-1	UU0447003	1	CONTROL PANEL, GRAY(1395), FAX-920 FOR GER/AUS	
62-1	UU0447004	1	CONTROL PANEL, GRAY(1395), FAX-920 FOR UK/CHE/IRE/ISR/CZE/GNR	
62-1	~~UU0449004~~	~~1~~	~~CONTROL PANEL, WHITE(1138), FAX-920 FOR UK~~	<Eliminated>
62-1	UU0447005	1	CONTROL PANEL, GRAY(1395), FAX-920 FOR FRA	
62-1	UU0447007	1	CONTROL PANEL, GRAY(1395), FAX-920 FOR NOR	
62-1	UU0447012	1	CONTROL PANEL, GRAY(1395), FAX-920 FOR FIN	
62-1	UU0447013	1	CONTROL PANEL, GRAY(1395), FAX-920 FOR DEN	
62-1	UU0447026	1	CONTROL PANEL, GRAY(1395), FAX-920 FOR SWE	
62-1	UU0448006	1	CONTROL PANEL, WHITE(1397), FAX-920 FOR ARL/NZ	
62-1	UU0449008	1	CONTROL PANEL, WHITE(1138), FAX-921 FOR BEL	
62-1	UU0449009	1	CONTROL PANEL, WHITE(1138), FAX-921 FOR NLD	
62-1	UU0449015	1	CONTROL PANEL, WHITE(1138), FAX-921 FOR SPA	
62-1	UU0449016	1	CONTROL PANEL, WHITE(1138), FAX-921 FOR ITA	
62-1	UU0450003	1	CONTROL PANEL, WHITE(1138), MFC-925 FOR GER	
62-1	UU0450004	1	CONTROL PANEL, WHITE(1138), FAX-920 FOR UK, MFC-925 FOR UK/CHE	
62-1	UU0450005	1	CONTROL PANEL, WHITE(1138), MFC-925 FOR FRA	
62-1	UU0450007	1	CONTROL PANEL, WHITE(1138), MFC-925 FOR NOR	
62-1	UU0450008	1	CONTROL PANEL, WHITE(1138), MFC-925 FOR BEL	
62-1	UU0450009	1	CONTROL PANEL, WHITE(1138), MFC-925 FOR NLD	
62-1	UU0450013	1	CONTROL PANEL, WHITE(1138), MFC-925 FOR DEN	
62-1	UU0450026	1	CONTROL PANEL, WHITE(1138), MFC-925 FOR SWE	
62-1	UU0451003	1	CONTROL PANEL, GRAY(1395), FAX-930 FOR GER/AUS	
62-1	UU0451004	1	CONTROL PANEL, GRAY(1395), FAX-930 FOR UK/CHE/IRE/GNR	
62-1	UU0451005	1	CONTROL PANEL, GRAY(1395), FAX-930 FOR FRA	
62-1	UU0451007	1	CONTROL PANEL, GRAY(1395), FAX-930 FOR NOR	
62-1	UU0451012	1	CONTROL PANEL, GRAY(1395), FAX-930 FOR FIN	
62-1	UU0451013	1	CONTROL PANEL, GRAY(1395), FAX-930 FOR DEN	
62-1	UU0451026	1	CONTROL PANEL, GRAY(1395), FAX-930 FOR SWE	
62-1	UU0452006	1	CONTROL PANEL, WHITE(1397), FAX-930 FOR ARL/NZ	
62-1	UU0453008	1	CONTROL PANEL, WHITE(1138), FAX-931 FOR BEL	
62-1	UU0453009	1	CONTROL PANEL, WHITE(1138), FAX-931 FOR NLD	
62-1	UU0453015	1	CONTROL PANEL, WHITE(1138), FAX-931 FOR SPA	
62-1	UU0453016	1	CONTROL PANEL, WHITE(1138), FAX-931 FOR ITA	
62-1	UU0454006	1	CONTROL PANEL, WHITE(1138), MFC-970MC FOR ARL/NZ	
62-2	UG6619001	1	PANEL PCB ASSY FOR FAX-910/920/921/MFC-925	
62-2	UG6643001	1	PANEL PCB ASSY FOR FAX-930/931/MFC-970MC	
62-3	UG3062001	1	LCD	
62-4	UG6624001	1	FPC KEY	
62-5	UG6703001	1	MICROPHONE FOR FAX-930/931/MFC-970MC	
62-6	UF9775001	1	PANEL REAR COVER	
62-7	UU0145001	1	SEPARATION RUBBER	

REF.NO.	CODE	Q'TY	DESCRIPTION	REMARKS
62-8	UF9777001	1	SPRING PLATE B	
62-9	UF9778001	1	SPRING PLATE A	
62-10	UF9995001	2	SPRING COVER	
62-11	UF9779001	1	DOCUMENT FRONT SENSOR ACTUATOR	
62-12	UF6116001	1	TAPTITE, PAN (WASHER) B M3X6	
62-13	UF9780001	1	DOCUMENT PRESSURE BAR	
62-14	UF9781001	1	DOCUMENT PRESSURE BAR SPRING	
62-15	UF9782001	1	GEAR 37	
62-16	UF9783001	1	DOCUMENT EJECTION ROLLER	
62-17	UF9787001	1	DOCUMENT EJECTION ROLLER GEAR	
62-18	UF9949001	1	BEARING, EJECTION ROLLER	
62-19	087310815	2	TAPTITE, CUP B M3X8	
62-20	087270615	1	TAPTITE, CUP B M2.6X6 FOR FAX-910/920/921/MFC-925	
62-20	087270615	2	TAPTITE, CUP B M2.6X6 FOR FAX-930/931/MFC-970MC	
62-21	UF4393010	1	KEY,TEL, GRAY(1395), FAX-910/920/930 FOR GER/UK/FRA/NOR/CHE/IRE/FIN/DEN/AUS/ISR/SWE/CZE/GNR	
62-21	UF4393012	1	KEY,TEL, WHITE(1397), FAX-920/930 FOR ARL/NZ	
62-21	UF4393003	1	KEY,TEL, WHITE(1138), FAX-921/931/MFC-925/970MC, FAX-920 FOR UK	
62-22	UF8172001	1	KEY,START, BLUE(6189), FAX-910/920/930	
62-22	UF8172004	1	KEY,START, BLUE(6238), FAX-921/931/MFC-925/970MC FAX-920(WHITE) FOR UK	
62-23	UF8173001	1	KEY,STOP, ORANGE(3159), FAX-910/920/930	
62-23	UF8173002	1	KEY,STOP, ORANGE(3172), FAX-921/931/MFC-925/970MC FAX-920(WHITE) FOR UK	
62-24	UF8174001	1	KEY,COPY, GRAY(1267), FAX-910/920/930	
62-24	UF8174003	1	KEY,COPY, WHITE(1138), FAX-921/931/MFC-925/970MC FAX-920 FOR UK	
62-25	UF8179001	1	KEY,COPY MODE, GRAY(1395), FAX-910/920/930 FOR GER/UK/FRA/NOR/CHE/IRE/FIN/DEN/AUS/ISR/SWE/CZE/GNR	
62-25	UF8179002	1	KEY,COPY MODE, WHITE(1397) FAX-920/930 FOR ARL/NZ	
62-25	UF8179004	1	KEY,COPY MODE, WHITE(1138), FAX-921/931/MFC-925/970MC FAX-920 FOR UK	
62-26	UF9118003	1	KEY,MODE, GRAY(1395), FAX-910/920/930 FOR GER/UK/FRA/NOR/CHE/IRE/FIN/DEN/AUS/ISR/SWE/CZE/GNR	
62-26	UF9118004	1	KEY,MODE, WHITE(1397), FAX-920/930 FOR ARL/NZ	
62-26	UF9118001	1	KEY,MODE, WHITE(1138), FAX-921/931/MFC-925/970MC FAX-920 FOR UK	
62-27	UF5581007	4	KEY,FUNCTION, GRAY(1395), FAX-910/920/930 FOR GER/UK/FRA/NOR/CHE/IRE/FIN/DEN/AUS/ISR/SWE/CZE/GNR	
62-27	UF5581008	4	KEY,FUNCTION, WHITE(1397), FAX-920/930 FOR ARL/NZ	
62-27	UF5581005	4	KEY,FUNCTION, WHITE(1138), FAX-921/931/MFC-925/970MC FAX-920 FOR UK	
62-28	UF9764001	1	KEY,ONE TOUCH, GRAY(1395), FAX-910/920/930 FOR GER/UK/FRA/NOR/CHE/IRE/FIN/DEN/AUS/ISR/SWE/CZE/GNR	
62-28	UF9764002	1	KEY,ONE TOUCH, WHITE(1397), FAX-920/930 FOR ARL/NZ	
62-28	UF9764003	1	KEY,ONE TOUCH, WHITE(1138), FAX-921/931/MFC-925/970MC FAX-920 FOR UK	
62-29	UF9960002	1	KEY,MC, GRAY(1421), FAX-930 FOR ARL/NZ	
62-29	UF9960001	1	KEY,MC, BLACK(010), FAX-931/MFC-970MC, FAX-930 FOR GER/UK/FRA/NOR/CHE/IRE/FIN/DEN/AUS/SWE/CZE/GNR	
62-30	UF9767001	1	FLASH KEY SUPPORT FOR FAX-930/931/MFC-970MC	
62-31	UF9765001	1	KEY,MC MODE FOR FAX-930/931/MFC-970MC	
62-32	UU0243001	1	ANTI STATIC BRUSH	

REF.NO.	CODE	Q'TY	DESCRIPTION	REMARKS
62-33	UF9788001	1	PRESSURE BAR SUPPORT	
62-34	UF9790001	1	WHITE FILM	
63	UG6625001	1	PANEL-MAIN HARNESS FOR FAX-910/920/921/MFC-925	
63	UG6882001	1	PANEL-MAIN HARNESS FOR FAX-920 FOR ARL	
63	UG6690001	1	PANEL-MAIN HARNESS FOR FAX-930/931/MFC-970MC	
63	UG6690001	1	PANEL-MAIN HARNESS FOR FAX-930/MFC-970MC FOR ARL	
64	UF9888001	1	LCD PLATE, FAX-910	
64	UU0207003	1	LCD PLATE, FAX-920 FOR GER/AUS	
64	UF9967004	1	LCD PLATE, FAX-920 FOR UK/FRA/NOR/CHE/IRE/FIN/DEN/ISR/SWE/CZE/GNR	
64	UF9967006	1	LCD PLATE, FAX-920 FOR ARL/NZ	
64	UU0228008	1	LCD PLATE, FAX-921 FOR BEL/NLD/SPA/ITA	
64	UU0128003	1	LCD PLATE, MFC-925 FOR GER	
64	UU0128004	1	LCD PLATE, MFC-925 FOR UK/NOR/BEL/NLD/CHE/DEN/SWE	
64	UU0128005	1	LCD PLATE, MFC-925 FOR FRA	
64	UU0168003	1	LCD PLATE, FAX-930 FOR GER/AUS	
64	UU0169004	1	LCD PLATE, FAX-930 FOR UK/CHE/IRE/GNR	
64	UU0170005	1	LCD PLATE, FAX-930 FOR FRA	
64	UU0171007	1	LCD PLATE, FAX-930 FOR NOR	
64	LE0389012	1	LCD PLATE, FAX-930 FOR FIN	
64	LE0395013	1	LCD PLATE, FAX-930 FOR DEN	
64	UU0176026	1	LCD PLATE, FAX-930 FOR SWE	
64	UU0205006	1	LCD PLATE, FAX-930 FOR ARL/NZ	
64	UU0229008	1	LCD PLATE, FAX-931 FOR BEL	
64	UU0173009	1	LCD PLATE, FAX-931 FOR NLD	
64	UU0174015	1	LCD PLATE, FAX-931 FOR SPA	
64	UU0175016	1	LCD PLATE, FAX-931 FOR ITA	
64	UU0314001	1	LCD PLATE, MFC-970MC	
65	UU0518001	1	ADDRESS LABEL	
66	UG6686021	1	MAIN PCB SUB ASSY, FAX-910/920/921/MFC-925 FOR GER/UK/FRA/ARL/NOR/BEL/NLD/CHE/IRE/ FIN/DEN/AUS/SPA/ITA/ISR/SWE/CZE/GNR	
66	UG6628001	1	MAIN PCB SUB ASSY, FAX-920 FOR NZ	
66	UG6687031	1	MAIN PCB SUB ASSY, FAX-930/931/MFC-970MC FOR GER/UK/FRA/ ARL/NOR/BEL/NLD/CHE/IRE/FIN/DEN/AUS/SPA/ITA/SWE/CZE/GNR	
66	UG6655011	1	MAIN PCB SUB ASSY, FAX-930/MFC-970MC FOR NZ	
67	UG6711003	1	NCU PCB ASSY, FAX-910/920/930/MFC-925 FOR GER	
67	UG6712004	1	NCU PCB ASSY, FAX-920/930/MFC-925 FOR UK/ISR/GNR	
67	UG6717005	1	NCU PCB ASSY, FAX-920/930/MFC-925 FOR FRA	
67	UG6713006	1	NCU PCB ASSY, FAX-920/930/MFC-970MC FOR ARL	
67	UG6713007	1	NCU PCB ASSY, FAX-920/930/MFC-925 FOR NOR	
67	UG6715008	1	NCU PCB ASSY, FAX-920/921/931/MFC-925 FOR BEL/CZE	
67	UG6716009	1	NCU PCB ASSY, FAX-921/931/MFC-925 FOR NLD	
67	UG6711010	1	NCU PCB ASSY, FAX-910/920/930/MFC-925 FOR CHE	
67	UG6713011	1	NCU PCB ASSY, FAX-920/930 FOR IRE	
67	UG6715012	1	NCU PCB ASSY, FAX-920/930 FOR FIN	
67	UG6715013	1	NCU PCB ASSY, FAX-920/930/MFC-925 FOR DEN	
67	UG6715014	1	NCU PCB ASSY, FAX-920/930 FOR AUS	
67	UG6899015	1	NCU PCB ASSY, FAX-921/931 FOR SPA	
67	UG6715016	1	NCU PCB ASSY, FAX-921/931 FOR ITA	
67	UG6712026	1	NCU PCB ASSY, FAX-920/930/MFC-925 FOR SWE	
(67-1)	UG6776000	1	ARRESTER:RA102 (LOCATION:A1)	
(67-2)	UG6775000	1	ARRESTER:RA311 (LOCATION:A2)	
(67-3)	UG6798000	2	PHOTO COUPLER:TLP621 (LOCATION:PH2,PH4)	

REF.NO.	CODE	Q'TY	DESCRIPTION	REMARKS
(67-4)	UG3272000	1	IC:THS-65 (LOCATION:T3)	
67	UG6858027	1	NCU PCB ASSY, FAX-920 FOR NZ	
67	UG6859077	1	NCU PCB ASSY, FAX-930/MFC-970MC FOR NZ	
(67-5)	T22708000	1	PHOTO COUPLER:TLP521 FOR NZ (LOCATION: PC1)	
(67-6)	UL8216000	1	PHOTO COUPLER:TLP320 FOR NZ (LOCATION: PC3)	
68	UG6691001	1	POWER SUPPLY PCB ASSY	
69	UF4444001	1	SCREW, PAN (WASHER) M4X6 DB	
70	UF6857001	1	HANDSET, GRAY(1395), FAX-920/930 FOR GER/FRA/NOR/CHE/IRE/FIN/DEN/AUS/ISR/SWE/CZE	
70	UF6857002	1	HANDSET, WHITE(1397), FAX-920/930 FOR ARL/NZ	
70	UF6857003	1	HANDSET, WHITE(1138), FAX-921/931/MFC-925/970MC, FAX-920 FOR UK	
70	UU0281001	1	HANDSET, GRAY(1395), FAX-920/930 FOR UK/GNR	
70	UU0281003	1	HANDSET, WHITE(1138), MFC-925 FOR UK	
71	UG3625001	1	TELEPHONE LINE CORD, FAX-910/920/MFC-925 FOR GER	
71	UL8230001	1	TELEPHONE LINE CORD, FAX-930 FOR GER	
71	UG3626001	1	TELEPHONE LINE CORD, FAX-920/MFC-925 FOR UK	
71	UL8211001	1	TELEPHONE LINE CORD, FAX-930 FOR UK	
71	UG3627001	1	TELEPHONE LINE CORD, FAX-920/MFC-925 FOR FRA	
71	UL8290001	1	TELEPHONE LINE CORD, FAX-930 FOR FRA	
71	UG3628001	1	TELEPHONE LINE CORD, FAX-920 FOR ARL	
71	UG3299001	1	TELEPHONE LINE CORD, FAX-930/MFC-970MC FOR ARL	
71	UG3629001	1	TELEPHONE LINE CORD, FAX-920/MFC-925 FOR NOR	
71	UL8384001	1	TELEPHONE LINE CORD, FAX-930 FOR NOR	
71	UG1575001	1	TELEPHONE LINE CORD, FAX-921/MFC-925 FOR BEL	
71	UL8219001	1	TELEPHONE LINE CORD, FAX-931 FOR BEL	
71	UG3631001	1	TELEPHONE LINE CORD, FAX-921/MFC-925 FOR NLD	
71	UL8231001	1	TELEPHONE LINE CORD, FAX-931 FOR NLD	
71	UG3469000	1	TELEPHONE LINE CORD, FAX-910/920/MFC-925 FOR CHE	
71	UG4169001	1	TELEPHONE LINE CORD, FAX-930 FOR CHE	
71	UG1570001	1	TELEPHONE LINE CORD, FAX-920 FOR IRE/SPA/CZE/GNR	
71	UG3409001	1	TELEPHONE LINE CORD, FAX-930 FOR IRE/SPA/CZE/GNR	
71	UG3632001	1	TELEPHONE LINE CORD, FAX-920 FOR FIN	
71	UL8217001	1	TELEPHONE LINE CORD, FAX-930 FOR FIN	
71	UG3633001	1	TELEPHONE LINE CORD, FAX-920/MFC-925 FOR DEN	
71	UL8288001	1	TELEPHONE LINE CORD, FAX-930 FOR DEN	
71	UG4205001	1	TELEPHONE LINE CORD, FAX-920/930 FOR AUS	
71	UG3634001	1	TELEPHONE LINE CORD, FAX-921 FOR ITA	
71	UL8289001	1	TELEPHONE LINE CORD, FAX-931 FOR ITA	
71	U85683001	1	TELEPHONE LINE CORD, FAX-920 FOR ISR	
71	UG3635001	1	TELEPHONE LINE CORD, FAX-920/MFC-925 FOR SWE	
71	UL8218001	1	TELEPHONE LINE CORD, FAX-930 FOR SWE	
71	UG3290001	1	TELEPHONE LINE CORD, FAX-920/930/MFC-970MC FOR NZ	
72	UG3543001	1	HANDSET CURLED CORD, GRAY(1395), FAX-920/930 FOR GER/UK/FRA/NOR/CHE/IRE/FIN/DEN/AUS/ISR/SWE/CZE/GNR	
72	UG3543002	1	HANDSET CURLED CORD, WHITE(1397), FAX-920/930 FOR ARL/NZ	
72	UG3543003	1	HANDSET CURLED CORD, WHITE(1138), FAX-921/931/MFC-925/970MC	
73	UF5607000	1	DOCUMENT WIRE EXTENSION	
74	UF9869001	1	PAPER WIRE EXTENSION	
75	UF9987001	1	PAPER SUPPORT	
76	UG2960003	1	MASK ROM:FAX-910 FOR GER	
76	LG0001010	1	OTPROM:FAX-910 FOR CHE	

REF.NO.	CODE	Q'TY	DESCRIPTION	REMARKS
76	UG2939003	1	OTPROM:FAX-920/MFC-925 FOR GER/AUS	
76	UG2940003	1	OTPROM:FAX-930 FOR GER/AUS	
76	UG2961004	1	MASK ROM:FAX-920/MFC-925 FOR ISR/GNR	
76	UG2939004	1	OTPROM:FAX-920/MFC925 FOR UK	
76	UG2940004	1	OTPROM:FAX-930 FOR UK/GNR	
76	UG2939005	1	OTPROM:FAX-920/MFC-925 FOR FRA	
76	UG2940005	1	OTPROM:FAX-930 FOR FRA	
76	UG2939006	1	OTPROM:FAX-920 FOR ARL	
76	UG2940006	1	OTPROM:FAX-930/MFC-970MC FOR ARL	
76	UG2963007	1	OTPROM:FAX-920/921/MFC-925 FOR NOR/BEL/CHE/CZE	
76	UG2964007	1	OTPROM:FAX-930/931 FOR NOR/BEL/CHE/CZE	
~~76~~	~~UG2896008~~	~~1~~	~~PROM:FAX-921/MFC-925 FOR BEL~~	
~~76~~	~~UG2900008~~	~~1~~	~~PROM:FAX-931 FOR BEL~~	
76	UG2963009	1	OTPROM:FAX-920/921/MFC-925 FOR NLD/IRE/FIN/DEN/ITA/SWE	
76	UG2964009	1	OTPROM:FAX-930/931 FOR NLD/IRE/FIN/DEN/ITA/SWE	
~~76~~	~~UG2896010~~	~~1~~	~~PROM:FAX-920/MFC-925 FOR CHE~~	
~~76~~	~~UG2900010~~	~~1~~	~~PROM:FAX-930 FOR CHE~~	
76	UG2939015	1	OTPROM:FAX-921 FOR SPA	
76	UG2940015	1	OTPROM:FAX-931 FOR SPA	
~~76~~	~~UG2896026~~	~~1~~	~~PROM:FAX-920/MFC-925 FOR SWE~~	
~~76~~	~~UG2900026~~	~~1~~	~~PROM:FAX-930 FOR SWE~~	
76	UG2939027	1	OTPROM:FAX-920 FOR NZ	
76	UG2940027	1	OTPROM:FAX-930/MFC-970MC FOR NZ	
(77)	UF9860001	1	RIBBON CASSETTE UNIT	
(77-1)	UF8064001	1	STARTER RIBBON (30M)	
(77-2)	UF9862001	1	RIBBON CASSETTE CASE	
(78)	UU0456001	2	HEAD PROTECTION SHEET	
(79)	UU0040001	1	MULTI FUNCTION LINK ASSY, MFC925	
(80)	UU1336004	1	CD ROM ASSY FOR MFC-925	
(81)	UU0419003	1	OPERATIONS MANUAL ASSY, FAX-910 FOR GER (INCLUDING OPERATIONS MANUAL FAX910(REF.NO.81-1), WARRANTY CARD EUR, SPPED DIAL LABEL FOR FAX-910(REF.NO.94), DOCUMENT WIRE EXTENSION(REF.NO.73), PAPER WIRE EXTENSION(REF.NO.74), PAPER SUPPORT(REF.NO.75))	
(81)	UU0628010	1	OPERATIONS MANUAL ASSY, FAX-910 FOR CHE (INCLUDING OPERATIONS MANUAL FAX-910<GERMAN>, OPERATIONS MANUAL FAX-910<FRENCH>(REF.NO.81-1), WARRANTY CARD EUR, SPPED DIAL LABEL FOR FAX-910(REF.NO.94), DOCUMENT WIRE EXTENSION(REF.NO.73), PAPER WIRE EXTENSION(REF.NO.74), PAPER SUPPORT(REF.NO.75))	
(81)	UU0420003	1	OPERATIONS MANUAL ASSY, FAX-920/930 FOR GER/AUS (INCLUDING OPERATIONS MANUAL FAX-920/930/MFC-925 FOR GER(REF.NO.81-1), WARRANTY CARD EUR, DOCUMENT WIRE EXTENSION(REF.NO.73), PAPER WIRE EXTENSION(REF.NO.74), PAPER SUPPORT(REF.NO.75))	
(81)	UU0436003	1	OPERATIONS MANUAL ASSY, MFC-925 FOR GER (INCLUDING OPERATIONS MANUAL FAX-920/930/MFC-925 FOR GER(REF.NO.81-1), MULTI FUNCTION LINK MANUAL MFC-925 FOR GER/UK/FRA/BEL/NLD/CHE(REF.NO.81-3), WARRANTY CARD EUR, DOCUMENT WIRE EXTENSION(REF.NO.73), PAPER WIRE EXTENSION(REF.NO.74), PAPER SUPPORT(REF.NO.75))	
(81)	UU0421004	1	OPERATIONS MANUAL ASSY, FAX-920/930 FOR UK	

REF.NO.	CODE	Q'TY	DESCRIPTION	REMARKS
			(INCLUDING OPERATIONS MANUAL FAX-920/930/MFC-925 FOR UK/IRE/GNR(REF.NO.81-1), WARRANTY CARD EUR, WARRANTY CARD UK-A, WARRANTY CARD UK-B, DOCUMENT WIRE EXTENSION(REF.NO.73), PAPER WIRE EXTENSION(REF.NO.74), PAPER SUPPORT(REF.NO.75))	
(81)	UU0437004	1	OPERATIONS MANUAL ASSY, MFC-925 FOR UK (INCLUDING OPERATIONS MANUAL FAX-920/930/MFC-925 FOR UK/IRE/GNR(REF.NO.81-1), MULTI FUNCTION LINK MANUAL MFC-925 FOR GER/UK/FRA/BEL/NLD/CHE(REF.NO.81-3), WARRANTY CARD EUR, WARRANTY CARD UK-A, WARRANTY CARD UK-B, DOCUMENT WIRE EXTENSION(REF.NO.73), PAPER WIRE EXTENSION(REF.NO.74), PAPER SUPPORT(REF.NO.75))	
(81)	UU0420005	1	OPERATIONS MANUAL ASSY, FAX-920/930 FOR FRA (INCLUDING OPERATIONS MANUAL FAX-920/930/MFC-925 FOR FRA(REF.NO.81-1), WARRANTY CARD EUR, WARRANTY CARD FRA, DOCUMENT WIRE EXTENSION(REF.NO.73), PAPER WIRE EXTENSION(REF.NO.74), PAPER SUPPORT(REF.NO.75))	
(81)	UU0438005	1	OPERATIONS MANUAL ASSY, MFC-925 FOR FRA (INCLUDING OPERATIONS MANUAL FAX-920/930/MFC-925 FOR FRA(REF.NO.81-1), MULTI FUNCTION LINK MANUAL MFC-925 FOR GER/UK/FRA/BEL/NLD/CHE(REF.NO.81-3), WARRANTY CARD EUR, WARRANTY CARD FRA, DOCUMENT WIRE EXTENSION(REF.NO.73), PAPER WIRE EXTENSION(REF.NO.74), PAPER SUPPORT(REF.NO.75))	
(81)	UU0423006	1	OPERATIONS MANUAL ASSY, FAX-920/930 FOR ARL (INCLUDING OPERATIONS MANUAL FAX-920/930/MFC-970MC FOR ARL(REF.NO.81-1), QUICK REFERENCE GUIDE FOR ARL/NZ (REF.NO.81-2), DOCUMENT WIRE EXTENSION(REF.NO.73), PAPER WIRE EXTENSION(REF.NO.74), PAPER SUPPORT(REF.NO.75))	
(81)	UU0315006	1	OPERATIONS MANUAL ASSY, MFC-970MC FOR ARL (INCLUDING OPERATIONS MANUAL FAX-920/930 FOR ARL(REF.NO.81-1), QUICK REFERENCE GUIDE FOR ARL/NZ(REF.NO.81-2), MULTI FUNCTION LINK MANUAL FOR ARL/NZ(REF.NO.81-3), DOCUMENT WIRE EXTENSION (REF.NO.73), PAPER WIRE EXTENSION(REF.NO.74), PAPER SUPPORT(REF.NO.75))	
(81)	UU0424007	1	OPERATIONS MANUAL ASSY, FAX-920/930 FOR NOR (INCLUDING OPERATIONS MANUAL FAX-920/930/MFC-925 FOR NOR(REF.NO.81-1), WARRANTY CARD EUR, WARRANTY CARD NOR, DOCUMENT WIRE EXTENSION(REF.NO.73), PAPER WIRE EXTENSION(REF.NO.74), PAPER SUPPORT(REF.NO.75))	
(81)	UU0439007	1	OPERATIONS MANUAL ASSY, MFC-925 FOR NOR (INCLUDING OPERATIONS MANUAL FAX-920/930/MFC-925 FOR NOR(REF.NO.81-1), MULTI FUNCTION LINK MANUAL MFC-925 FOR NOR/DEN/SWE(REF.NO.81-3), WARRANTY CARD EUR, WARRANTY CARD NOR, DOCUMENT WIRE EXTENSION(REF.NO.73), PAPER WIRE EXTENSION(REF.NO.74), PAPER SUPPORT(REF.NO.75))	

REF.NO.	CODE	Q'TY	DESCRIPTION	REMARKS
(81)	UU0425008	1	OPERATIONS MANUAL ASSY, FAX-921/931 FOR BEL (INCLUDING OPERATIONS MANUAL FAX-921/931/MFC-925 FOR BEL<DUTCH>(REF.NO.81-1), OPERATIONS MANUAL FAX-920 /921/930/931/MFC-925 FOR BEL/CHE<FRENCH>(REF.NO.81-1), WARRANTY CARD EUR, DOCUMENT WIRE EXTENSION (REF.NO.73), PAPER WIRE EXTENSION(REF.NO.74), PAPER SUPPORT(REF.NO.75))	
(81)	UU0440008	1	OPERATIONS MANUAL ASSY, MFC-925 FOR BEL (INCLUDING OPERATIONS MANUAL FAX-921/931/MFC-925 FOR BEL<DUTCH>(REF.NO.81-1), OPERATIONS MANUAL FAX-920/921/930/931/MFC-925 FOR BEL/CHE<FRENCH> (REF.NO.81-1), MULTI FUNCTION LINK MANUAL MFC-925 FOR GER/UK/FRA/BEL/NLD/CHE(REF.NO.81-3), WARRANTY CARD EUR, DOCUMENT WIRE EXTENSION(REF.NO.73), PAPER WIRE EXTENSION(REF.NO.74), PAPER SUPPORT(REF.NO.75))	
(81)	UU0426009	1	OPERATIONS MANUAL ASSY, FAX-921/931 FOR NLD (INCLUDING OPERATIONS MANUAL FAX-921/931/MFC-925 FOR NLD(REF.NO.81-1), WARRANTY CARD EUR, DOCUMENT WIRE EXTENSION(REF.NO.73), PAPER WIRE EXTENSION(REF.NO.74), PAPER SUPPORT(REF.NO.75))	
(81)	UU0441009	1	OPERATIONS MANUAL ASSY, MFC-925 FOR NLD (INCLUDING OPERATIONS MANUAL FAX-921/931/MFC-925 FOR NLD(REF.NO.81-1), MULTI FUNCTION LINK MANUAL MFC-925 FOR GER/UK/FRA/BEL/NLD/CHE(REF.NO.81-3), WARRANTY CARD EUR, DOCUMENT WIRE EXTENSION(REF.NO.73), PAPER WIRE EXTENSION(REF.NO.74), PAPER SUPPORT(REF.NO.75))	
(81)	UU0427010	1	OPERATIONS MANUAL ASSY, FAX-920/930 FOR CHE (INCLUDING OPERATIONS MANUAL FAX-920/930/MFC-925 FOR CHE<GERMAN>(REF.NO.81-1), OPERATIONS MANUAL FAX-920/921/930/931/MFC-925 FOR BEL/CHE<FRENCH> (REF.NO.81-1), WARRANTY CARD EUR, DOCUMENT WIRE EXTENSION(REF.NO.73), PAPER WIRE EXTENSION(REF.NO.74), PAPER SUPPORT(REF.NO.75))	
(81)	UU0442010	1	OPERATIONS MANUAL ASSY, MFC-925 FOR CHE (INCLUDING OPERATIONS MANUAL FAX-920/930/MFC-925 FOR CHE<GERMAN>(REF.NO.81-1), OPERATIONS MANUAL FAX-920/930/MFC-925 FOR BEL/CHE<FRENCH>(REF.NO.81-1), MULTI FUNCTION LINK MANUAL MFC-925 FOR GER/UK/FRA/ BEL/NLD/CHE(REF.NO.81-3), WARRANTY CARD EUR, DOCUMENT WIRE EXTENSION(REF.NO.73), PAPER WIRE EXTENSION(REF.NO.74), PAPER SUPPORT(REF.NO.75))	
(81)	UU0428011	1	OPERATIONS MANUAL ASSY, FAX-920/930 FOR IRE (INCLUDING OPERATIONS MANUAL FAX-920/930/MFC-925 FOR UK/IRE/GNR(REF.NO.81-1), WARRANTY CARD EUR, DOCUMENT WIRE EXTENSION(REF.NO.73), PAPER WIRE EXTENSION(REF.NO.74), PAPER SUPPORT(REF.NO.75))	
(81)	UU0429012	1	OPERATIONS MANUAL ASSY, FAX-920 FOR FIN (INCLUDING OPERATIONS MANUAL FAX-920 FOR FIN(REF.NO.81-1), ~~WARRANTY CARD EUR,~~ DOCUMENT WIRE EXTENSION(REF.NO.73), PAPER WIRE	

REF.NO.	CODE	Q'TY	DESCRIPTION	REMARKS
			EXTENSION(REF.NO.74), PAPER SUPPORT(REF.NO.75))	
(81)	UU0430013	1	OPERATIONS MANUAL ASSY, FAX-920/930 FOR DEN (INCLUDING OPERATIONS MANUAL FAX-920/930/MFC-925 FOR DEN(REF.NO.81-1), WARRANTY CARD EUR, DOCUMENT WIRE EXTENSION(REF.NO.73), PAPER WIRE EXTENSION(REF.NO.74), PAPER SUPPORT(REF.NO.75))	
(81)	UU0443013	1	OPERATIONS MANUAL ASSY, MFC-925 FOR DEN (INCLUDING OPERATIONS MANUAL FAX-920/930/MFC-925 FOR DEN(REF.NO.81-1), MULTI FUNCTION LINK MANUAL MFC-925 FOR NOR/DEN/SWE(REF.NO.81-3), WARRANTY CARD EUR, DOCUMENT WIRE EXTENSION(REF.NO.73), PAPER WIRE EXTENSION(REF.NO.74), PAPER SUPPORT(REF.NO.75))	
(81)	UU0431015	1	OPERATIONS MANUAL ASSY, FAX-921/931 FOR SPA (INCLUDING OPERATIONS MANUAL FAX-921/931 FOR SPA(REF.NO.81-1), WARRANTY CARD EUR, DOCUMENT WIRE EXTENSION(REF.NO.73), PAPER WIRE EXTENSION(REF.NO.74), PAPER SUPPORT(REF.NO.75))	
(81)	UU0432016	1	OPERATIONS MANUAL ASSY, FAX-921/931 FOR ITA (INCLUDING OPERATIONS MANUAL FAX-921/931 FOR ITA(REF.NO.81-1), WARRANTY CARD EUR, DOCUMENT WIRE EXTENSION(REF.NO.73), PAPER WIRE EXTENSION(REF.NO.74), PAPER SUPPORT(REF.NO.75))	
(81)	UU0433017	1	OPERATIONS MANUAL ASSY, FAX-920/930 FOR ISR/FIN/CZE/GNR (INCLUDING OPERATIONS MANUAL FAX-920/930/MFC-925 FOR UK(REF.NO.81-1), WARRANTY CARD EUR, DOCUMENT WIRE EXTENSION(REF.NO.73), PAPER WIRE EXTENSION(REF.NO.74), PAPER SUPPORT(REF.NO.75))	
(81)	UU0434026	1	OPERATIONS MANUAL ASSY, FAX-920/930 FOR SWE (INCLUDING OPERATIONS MANUAL FAX-920/930/MFC-925 FOR SWE(REF.NO.81-1), WARRANTY CARD EUR, WARRANTY CARD SWE, DOCUMENT WIRE EXTENSION(REF.NO.73), PAPER WIRE EXTENSION(REF.NO.74), PAPER SUPPORT(REF.NO.75))	
(81)	UU0444026	1	OPERATIONS MANUAL ASSY, MFC-925 FOR SWE (INCLUDING OPERATIONS MANUAL FAX-920/930/MFC-925 FOR SWE(REF.NO.81-1), MULTI FUNCTION LINK MANUAL MFC-925 FOR NOR/DEN/SWE(REF.NO.81-3), WARRANTY CARD EUR, WARRANTY CARD SWE, DOCUMENT WIRE EXTENSION(REF.NO.73), PAPER WIRE EXTENSION(REF.NO.74), PAPER SUPPORT(REF.NO.75))	
(81)	UU0435027	1	OPERATIONS MANUAL ASSY, FAX-920/930 FOR NZ (INCLUDING OPERATIONS MANUAL FAX-920/930/MFC-925 FOR NZ(REF.NO.81-1), QUICK REFERENCE GUIDE FOR ARL/NZ (REF.NO.81-2), DOCUMENT WIRE EXTENSION(REF.NO.73), PAPER WIRE EXTENSION(REF.NO.74), PAPER SUPPORT(REF.NO.75))	
(81)	UU0315027	1	OPERATIONS MANUAL ASSY, MFC-970MC FOR NZ (INCLUDING OPERATIONS MANUAL FAX-920/930 FOR NZ(REF.NO.81-1), QUICK REFERENCE GUIDE FOR ARL/NZ (REF.NO.81-2), MULTI FUNCTION LINK MANUAL FOR ARL/NZ(REF.NO.81-3), DOCUMENT WIRE EXTENSION(REF.NO.73), PAPER WIRE	

REF.NO.	CODE	Q'TY	DESCRIPTION	REMARKS
			EXTENSION(REF.NO.74), PAPER SUPPORT(REF.NO.75))	
(81)	~~UU0445004~~	~~1~~	~~OPERATIONS MANUAL ASSY, FAX-920/930 FOR GNR~~	
			(INCLUDING OPERATIONS MANUAL FAX-920/930/MFC-925	
			FOR UK/GNR(REF.NO.81-1),	
			DOCUMENT WIRE EXTENSION(REF.NO.73), PAPER WIRE	
			EXTENSION(REF.NO.74), PAPER SUPPORT(REF.NO.75))	
(81-1)	UF9889003	1	OPERATIONS MANUAL, FAX-910 FOR GER	
(81-1)	UF9889010	1	OPERATIONS MANUAL, FAX-910 FOR CHE<GERMAN>	
(81-1)	UU0629008	1	OPERATIONS MANUAL, FAX-910 FOR CHE<FRENCH>	
(81-1)	UU0079003	1	OPERATIONS MANUAL, FAX-920/930/MFC-925 FOR GER	
(81-1)	UU0079004	1	OPERATIONS MANUAL, FAX-920/930/MFC-925	
			FOR UK/IRE/FIN/ISR/CZE/GNR	
(81-1)	UU0079005	1	OPERATIONS MANUAL, FAX-920/930/MFC-925 FOR FRA	
(81-1)	UU0079006	1	OPERATIONS MANUAL, FAX-920/930/MFC-970MC FOR ARL	
(81-1)	UU0079007	1	OPERATIONS MANUAL, FAX-920/930/MFC-925 FOR NOR	
(81-1)	UU0079008	1	OPERATIONS MANUAL, FAX-921/931/MFC-925 FOR BEL<DUTCH>	
(81-1)	UU0080008	1	OPERATIONS MANUAL, FAX-920/921/930/931/MFC-925	
			FOR BEL/CHE<FRENCH>	
(81-1)	UU0079009	1	OPERATIONS MANUAL, FAX-921/931/MFC-925 FOR NLD	
(81-1)	UU0079010	1	OPERATIONS MANUAL, FAX-920/930/MFC-925 FOR CHE	
~~(81-1)~~	~~UU0079011~~	~~1~~	~~OPERATIONS MANUAL, FAX-920/930 FOR IRE~~	<Eliminated>
(81-1)	UU0079012	1	OPERATIONS MANUAL, FAX-920 FOR FIN	
(81-1)	UU0079013	1	OPERATIONS MANUAL, FAX-920/930/MFC-925 FOR DEN	
(81-1)	UU0079015	1	OPERATIONS MANUAL, FAX-921/931 FOR SPA	
(81-1)	UU0079016	1	OPERATIONS MANUAL, FAX-921/931 FOR ITA	
(81-1)	UU0079017	1	OPERATIONS MANUAL, FAX-920 FOR ISR	
(81-1)	UU0079026	1	OPERATIONS MANUAL, FAX-920/930/MFC925 FOR SWE	
(81-1)	UU0079027	1	OPERATIONS MANUAL, FAX-920/930/MFC-970MC FOR NZ	
(81-2)	UU0242001	1	QUICK REFERENCE GUIDE FOR ARL/NZ	
(81-3)	UF5469001	1	MULTI FUNCTION LINK MANUAL FOR ARL/NZ	
(81-3)	UU0129001	1	MULTI FUNCTION LINK MANUAL, MFC-925	
			FOR GER/UK/FRA/BEL/NLD/CHE	
(81-3)	UU0130001	1	MULTI FUNCTION LINK MANUAL, MFC-925 FOR NOR/DEN/SWE	
(82)	UF8263001	1	TEST CHART TC-027	
(83)	~~UF9883001~~	~~1~~	~~MYLAR LABEL, FAX-910~~	<Eliminated>
(83)	~~UF9911003~~	~~1~~	~~MYLAR LABEL, FAX-920 FOR GER/AUS~~	<Eliminated>
(83)	~~UF9911004~~	~~1~~	~~MYLAR LABEL, FAX-920 FOR UK/CHE/IRE/GNR~~	<Eliminated>
(83)	~~UF9911005~~	~~1~~	~~MYLAR LABEL, FAX-920 FOR FRA~~	<Eliminated>
(83)	UF0241006	1	MYLAR LABEL, FAX-920 FOR ARL	
(83)	~~UF9911007~~	~~1~~	~~MYLAR LABEL, FAX-920 FOR NOR~~	<Eliminated>
(83)	~~UF9911009~~	~~1~~	~~MYLAR LABEL, FAX-920 FOR NLD~~	<Eliminated>
(83)	~~UF9911026~~	~~1~~	~~MYLAR LABEL, FAX-920 FOR SWE~~	<Eliminated>
(83)	~~UU0120003~~	~~1~~	~~MYLAR LABEL, MFC-925 FOR GER~~	<Eliminated>
(83)	~~UU0120004~~	~~1~~	~~MYLAR LABEL, MFC-925 FOR UK/CHE~~	<Eliminated>
(83)	~~UU0120005~~	~~1~~	~~MYLAR LABEL, MFC-925 FOR FRA~~	<Eliminated>
(83)	~~UU0120007~~	~~1~~	~~MYLAR LABEL, MFC-925 FOR NOR~~	<Eliminated>
(83)	~~UU0120009~~	~~1~~	~~MYLAR LABEL, MFC-925 FOR NLD~~	<Eliminated>
(83)	~~UU0120026~~	~~1~~	~~MYLAR LABEL, MFC-925 FOR SWE~~	<Eliminated>
(83)	~~UU0158003~~	~~1~~	~~MYLAR LABEL, FAX-930 FOR GER/AUS~~	<Eliminated>
(83)	~~UU0158004~~	~~1~~	~~MYLAR LABEL, FAX-930 FOR UK/CHE/IRE/GNR~~	<Eliminated>
(83)	~~UU0158005~~	~~1~~	~~MYLAR LABEL, FAX-930 FOR FRA~~	<Eliminated>
(83)	UU0249006	1	MYLAR LABEL, FAX-930 FOR ARL	
(83)	~~UU0158009~~	~~1~~	~~MYLAR LABEL, FAX-930 FOR NLD~~	<Eliminated>
(83)	UU0312006	1	MYLAR LABEL, FAX-970 FOR ARL	

REF.NO.	CODE	Q'TY	DESCRIPTION	REMARKS
(84)	LE0347001	1	CARTON, BROTHER FAX-910	
(84)	LE0348001	1	CARTON, BROTHER FAX-920 FOR GER/UK/FRA/CHE/IRE/AUS/ISR/CZE/GNR	
(84)	LE0407001	1	CARTON, BROTHER FAX-920 FOR ARL/NZ	
(84)	LE0352001	1	CARTON, BROTHER FAX-921 FOR BEL/NLD/SPA/ITA	
(84)	LE0349001	1	CARTON, BROTHER FAX-920 FOR NOR/FIN/DEN/SWE	
(84)	UE1932001	1	CARTON, BROTHER MFC-925 FOR GER/UK/FRA/BEL/NLD/CHE	
(84)	UE1933001	1	CARTON, BROTHER MFC-925 FOR NOR/DEN/SWE	
(84)	LE0350001	1	CARTON, BROTHER FAX-930 FOR GER/UK/FRA/CHE/ IRE/FIN/DEN/AUS/CZE/GNR	
(84)	LE0408001	1	CARTON, BROTHER FAX-930 FOR ARL/NZ	
(84)	LE0351001	1	CARTON, BROTHER FAX-930 FOR NOR/SWE	
(84)	LE0353001	1	CARTON, BROTHER FAX-931 FOR BEL/NLD/SPA/ITA	
(84)	LE0409001	1	CARTON, BROTHER MFC-970MC FOR ARL/NZ	
(85)	~~UE1763001~~	~~1~~	~~STYROFORM FOR MFC-925, FAX-920/930/MFC-970MC FOR ARL/NZ~~	<Eliminated>
(85)	LE0212001	1	STYROFORM	
(86)	UE1172001	1	BAG, 570X650H	
(87)	UE1766001	1	CARTON FOR ACCESSORIES	
88	UF9872001	2	PAPER GUIDE	
89	UG3680001	1	AC CORD ASSY FOR GER/FRA/NOR/BEL/NLD/FIN/AUS/SPA/ITA/SWE/CZE/GNR	
89	UG3681001	1	AC CORD ASSY FOR UK/IRE	
89	UG3682001	1	AC CORD ASSY FOR ARL/NZ	
89	UG3683001	1	AC CORD ASSY FOR CHE	
89	UG6669001	1	AC CORD ASSY FOR DEN	
89	UG3684001	1	AC CORD ASSY FOR ISR	
90	UG6618001	1	MAIN-HOOK SWITCH HARNESS FOR FAX-920/921/930/931/MFC-925/970MC	
91	UF5745000	1	HIDE COVER, EXT FOR GER/UK/FRA/BEL/NLD/FIN/DEN/AUS/ITA/SWE/CZE/GNR	
92	UF7095000	1	HIDE COVER, H/S FOR FAX-910	
93	-----	1	NOT USED	
(94)	UU0405001	1	SPPED DIAL LABEL FOR FAX-910	
95	087310815	1	TAPTITE, CUP B M3X8	
(96)	-----	1	NOT USED	
(97)	-----	1	NOT USED	
(98)	048050356	1	RETAINING RING, E5	

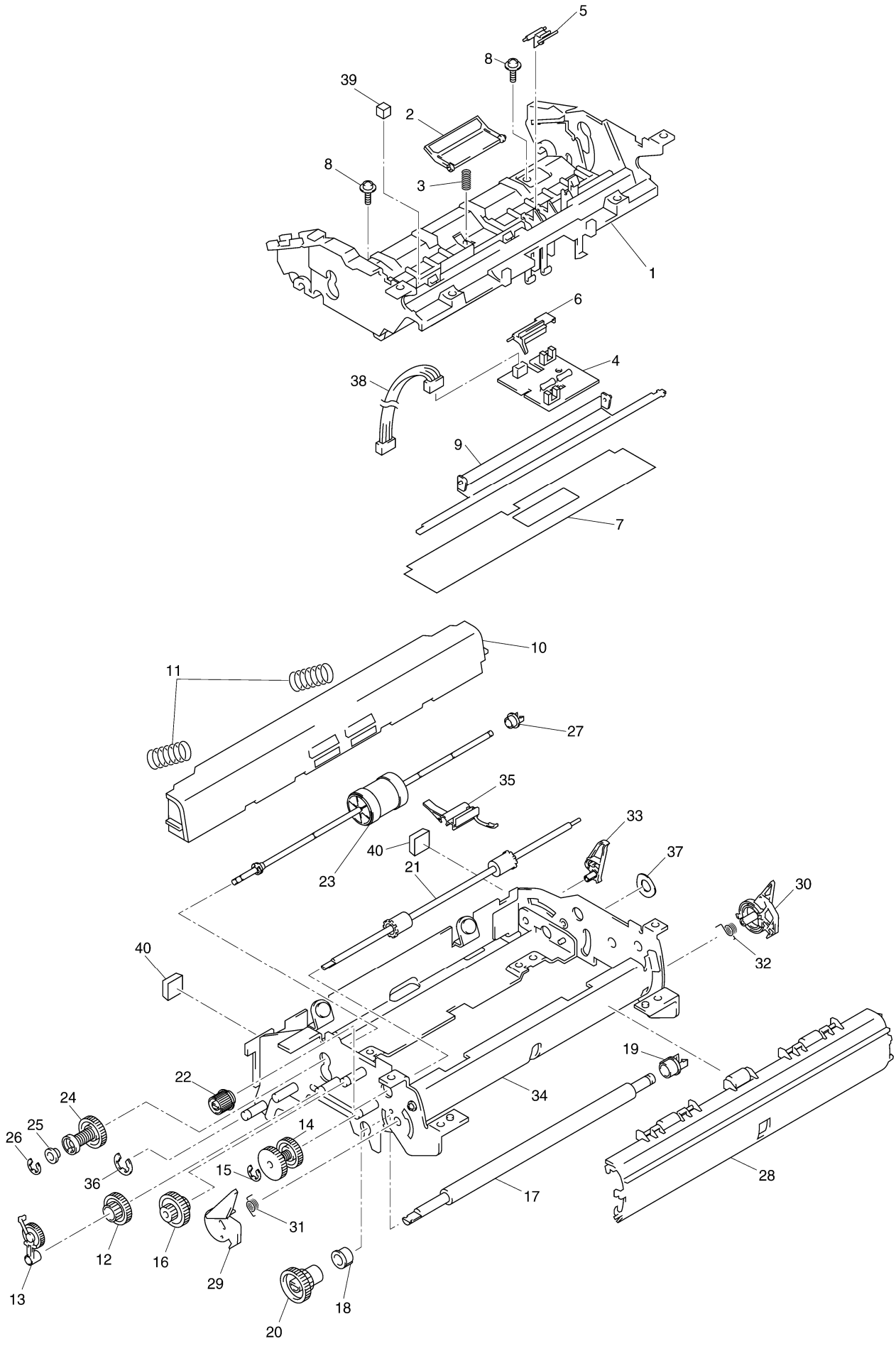
5
8
39
2
8
3
1
6
4
38
9
7
10
11
27
35
33
40
23
21
37
30
40
32
22
19
24
34
25
14
26
15
36
28
17
31
12
16
29
13
18
20

1. PLATEN FRAME ATTACHMENT

REF.NO.	CODE	Q'TY	DESCRIPTION	REMARKS
1	UF9736001	1	PAPER FEED CHUTE	
2	UF9737001	1	SEPARATION PAD	
3	UF9740001	1	SEPARATION PAD SPRING	
4	UG6609001	1	SENSOR PCB	
5	UF9741001	1	PAPER EDGE SENSOR ACTUATOR	
6	UF9742001	1	PAPER EJECTION SENSOR ACTUATOR	
7	UF9744001	1	CHUTE FILM	
8	U24014001	2	TAPTITE, CUP S M3.0X6	
9	UF9750001	1	PRESSURE PLATE LINK	
10	UF9746001	1	PRESSURE PLATE	
11	UF9745001	2	PRESSURE PLATE SPRING	
12	UF9712001	1	GEAR 24/28, SUN GEAR	
13	UF9713001	1	ARM P ASSY	
14	UF9715001	1	CLUTCH GEAR 37 ASSY	
15	048030346	1	RETAINING RING, E3	
16	UF9719001	1	GEAR 19/38	
17	UF9720001	1	PLATEN	
18	UF9722001	1	PLATEN SHAFT BUSHING, L	
19	UF9723001	1	PLATEN SHAFT BUSHING, R	
20	UF9724001	1	GEAR 25/27	
21	UF9725001	1	PAPER EJECTION ROLLER	
22	UF9727001	1	PAPER EJECTION ROLLER GEAR	
23	UF9728001	1	PAPER FEED ROLLER ASSY	
24	UF9730001	1	GEAR 43 ASSY	
25	UF9734001	1	COLLAR STOPPER	
26	048040346	1	RETAINING RING, E4	
27	UF0026001	1	PAWLED BUSHING	
28	UF9751001	1	CHUTE B ASSY	
29	UF9755001	1	LOCK LEVER L, BLUE(6155)	
30	UF9756001	1	LOCK LEVER R, BLUE(6155)	
31	UF9757001	1	LOCK LEVER SPRING, L	
32	UF9758001	1	LOCK LEVER SPRING, R	
33	UF9792001	1	PRESSURE PLATE RELEASE CAM	
34	UF9701001	1	PLATEN FRAME	
35	UF9873001	1	FRONT COVER SENSING ACTUATOR	
36	048050346	1	RETAINING RING, E5	
37	UU0078001	1	SPRING WASHER	
38	UG6612001	1	MAIN-SENSOR HARNESS	
39	~~UF8979001~~	~~1~~	~~HARNESS GUIDE~~	<Eliminated>
39	-----		NOT USED	
40	UF6761001	2	RUBBER FOOT	